Standard Detail Drawings

Appendix A

Note:
1) Per PWDS 1.10.b.9, the applicable City standard details shall be included on construction drawings submitted for City review and approval.

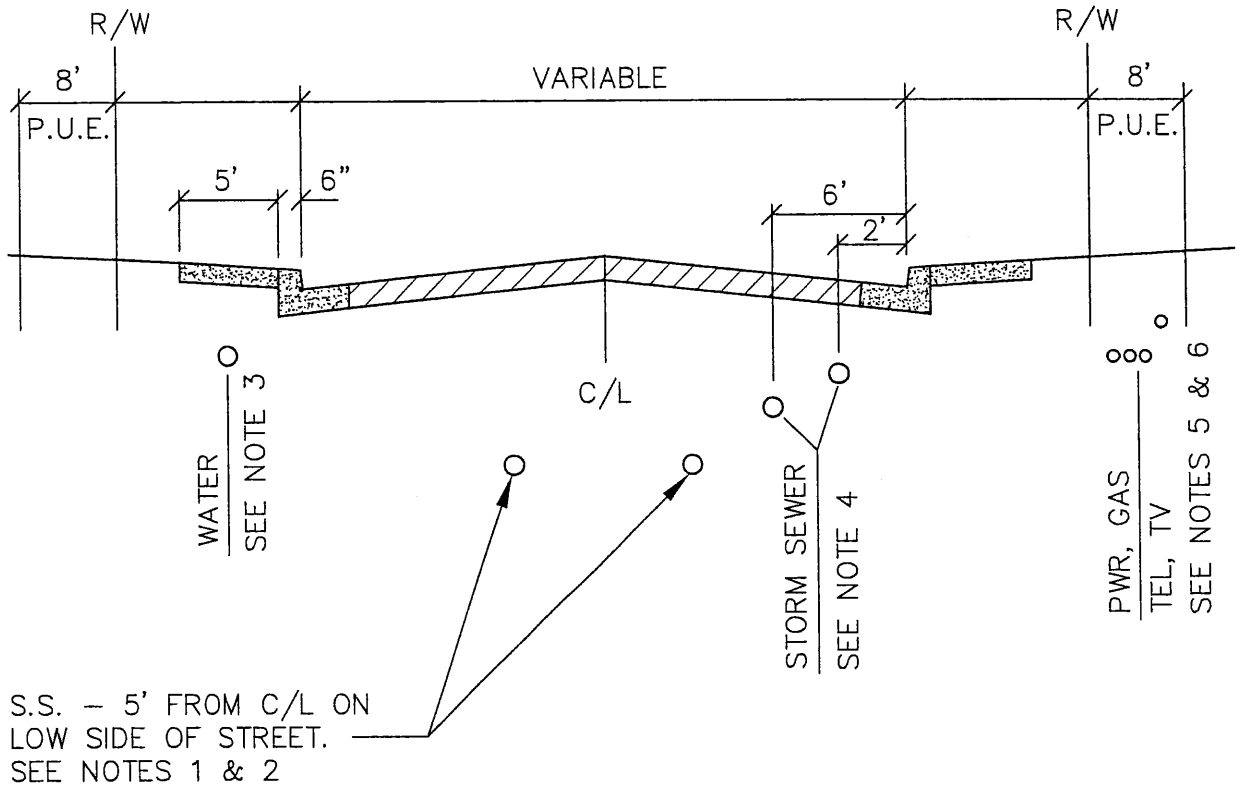

CURBED STREETS

NTS

NOTES:

1. 4' MIN. COVER REQUIRED ON SANITARY SEWER MAINS AND LATERALS.
2. LATERALS AND P/L CLEANOUTS TO BE INSTALLED DURING CONSTRUCTION OF SANITARY SEWER MAINS.
3. WATER TO BE INSTALLED 3' BEHIND FACE OF CURB ON HIGH SIDE OF STREET. 36" MIN. COVER ON ALL WATERLINES.
4. STORM SEWER TO BE INSTALLED ON LOW SIDE OF STREET:
   a) 2' FROM FACE OF CURB FOR <4' RIM TO INVERT
   b) 6' FROM FACE OF CURB FOR >4' RIM TO INVERT (MH SYSTEM)
5. MAINTAIN MIN. 3' HORIZ. SEPARATION BETWEEN PUBLIC UTILITIES & PARALLEL PRIVATE UTILITIES. OTHER VERT. AND HORIZ. SEPARATION DISTANCES ARE CONTROLLED BY DEQ, OHD, AND OTHER PUBLIC/PRIVATE UTILITY COMPANIES.
6. UNITY TRENCH PER UTILITY COMPANY REQMTS. ON OPPOSITE SIDE OF STREET FROM WATER LINE.

LAST REVISION DATE: OCTOBER 1997	COPYRIGHT 1996 WESTECH ENGINEERING, INC.
TYP. UTILITY LOCATIONS (CURBED STREETS) (NTS)	
MT ANGEL, OR	DETAIL NO. 101

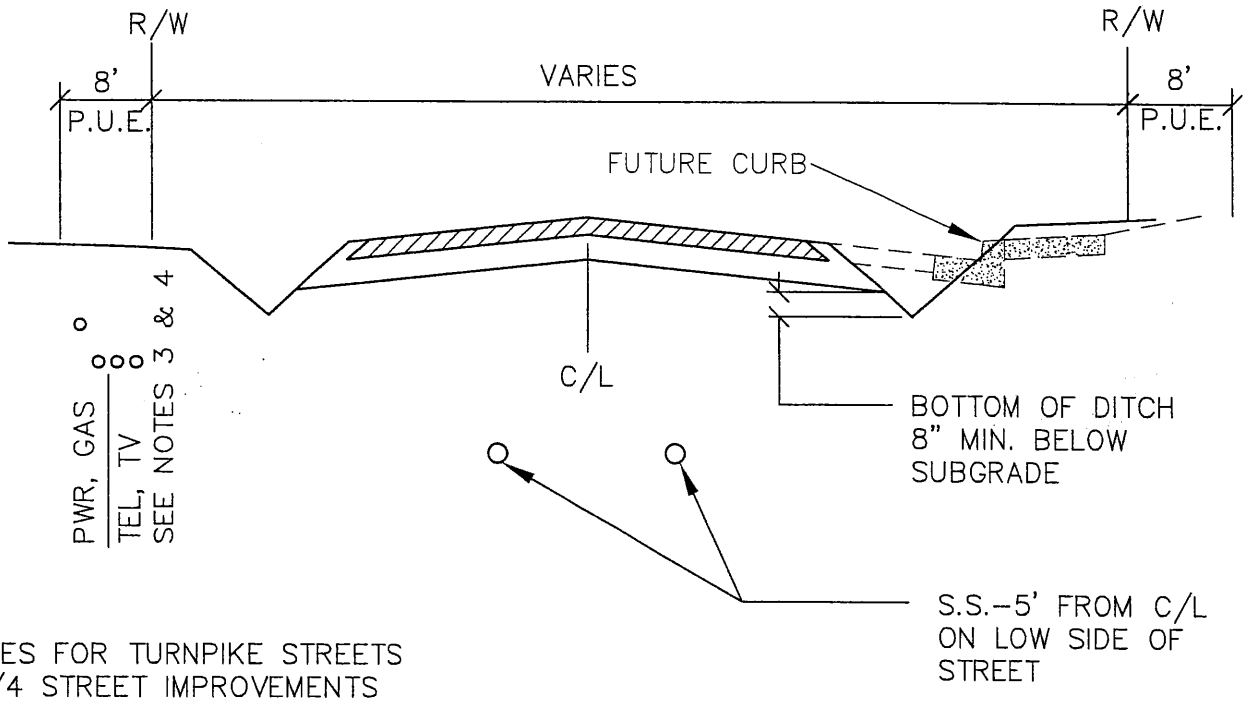

NOTE:

UTILITIES FOR TURNPIKE STREETS OR 3/4 STREET IMPROVEMENTS SHALL BE LOCATED TO ALLOW FUTURE CONSTRUCTION OF CURBED STREETS WITHOUT RELOCATING UTILITIES. SEE DETAIL 101.

TURNPIKE STREETS

NTS

NOTES:

1. 4' MIN. COVER REQUIRED ON SANITARY SEWER MAINS AND LATERALS.
2. LATERALS AND P/L CLEANOUTS TO BE INSTALLED DURING CONSTRUCTION OF SANITARY SEWER MAINS.
3. WATER TO BE INSTALLED 3' BEHIND FACE OF CURB ON IMPROVED SIDE OR 3' BEHIND FUTURE FACE OF CURB LOCATION AS DIRECTED BY THE CITY ENGINEER.

LAST REVISION DATE: OCTOBER 1997	COPYRIGHT 1996 WESTECH ENGINEERING, INC.
TYP. UTILITY LOCATIONS (TURNPIKE AND 3/4 STREETS) (NTS)	
MT ANGEL, OR	DETAIL NO. 102

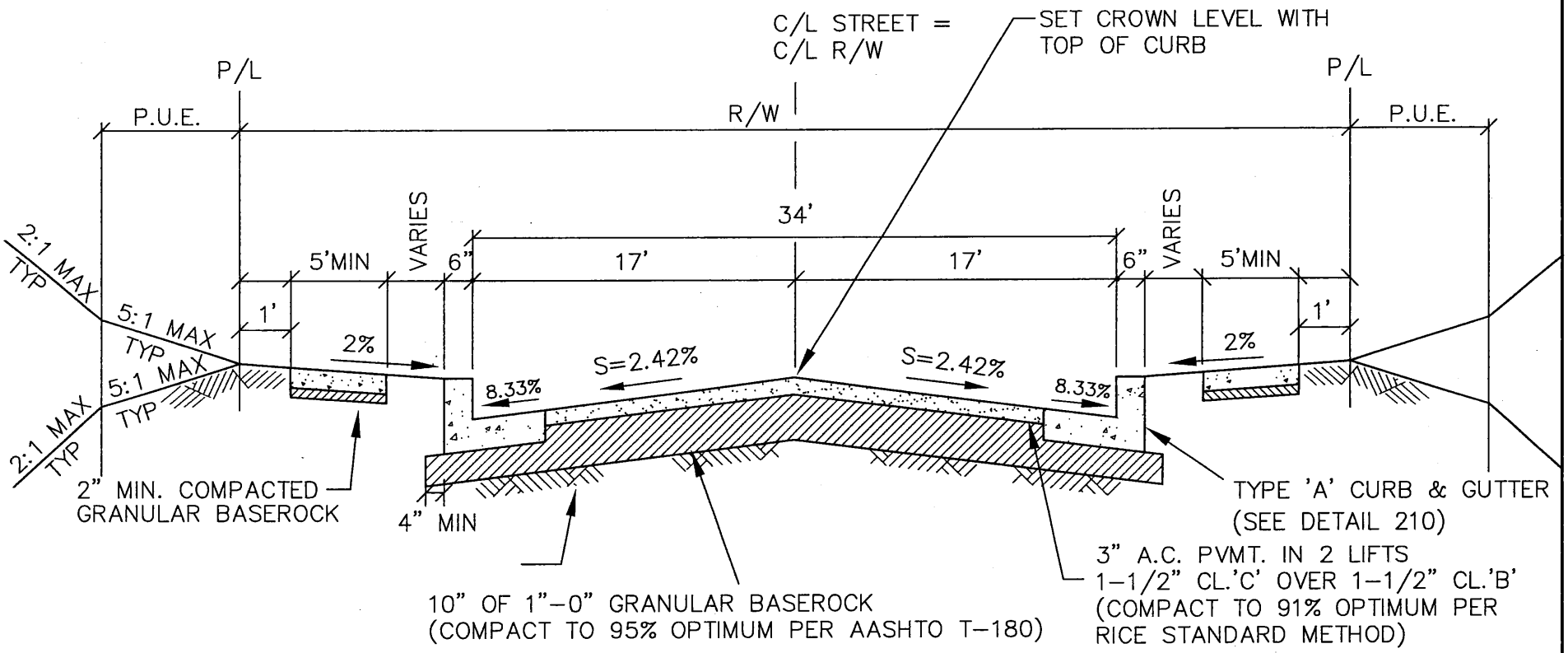

ALT: 1-1/2" OF 3/4"-0" GRANULAR BASEROCK OVER
10-1/2" OF 1-1/2"-0" GRANULAR BASEROCK.

NOTES:

1. ALL DESIGN SUBGRADES SHALL BE COMPACTED AND PROOF-ROLLED PRIOR TO PLACEMENT OF BASEROCK. COMPACTION TESTING OF SUBGRADE MAY BE WAIVED AS OUTLINED UNDER NOTE 3.
2. IF SUBGRADE FAILS THE PROOF-ROLL, SUBGRADE SHALL BE OVEREXCAVATED TO UNDISTURBED SOIL AND BACKFILLED WITH BASEROCK OVER GEOTEXTILE REINFORCEMENT FABRIC (AS SPECIFIED) TO ALLOW COMPACTION OF UPPER (DESIGN) BASEROCK SECTION AND TO MAINTAIN STRUCTURAL INTEGRITY OF NATIVE SUBGRADE SOILS. TYPICAL MIN. OVEREXCAVATION REQUIRED IS 12-INCHES. NO RUBBER TIRED EQUIPMENT ALLOWED ON SUBGRADE FOLLOWING OVEREXCAVATION.
3. IF SUBGRADE PASSES PROOF-ROLL BUT CANNOT BE COMPACTED TO 95% OPTIMUM DENSITY PER AASHTO T-180 (OR IF CONTRACTOR CHOOSES NOT TO TEST), GEOTEXTILE SEPARATION FABRIC (AS SPECIFIED) SHALL BE PLACED ON THE SUBGRADE PRIOR TO PLACEMENT OF THE BASEROCK.
4. REINFORCEMENT FABRIC: NON-WOVEN (MIRAFI 1000N, GEOTEX 1001, LINQ 250EX OR EQUAL), WOVEN (MIRAFI 550X, GEOTEX 250ST, LINQ GTF250 OR EQUAL).
   SEPARATION FABRIC: NON-WOVEN (MIRAFI 160N, GEOTEX 601, LINQ 150EX OR EQUAL), WOVEN (MIRAFI 500X, GEOTEX 200ST, LINQ GTF200 OR EQUAL).

34' RESIDENTIAL STREET

MINIMUM SECTION

(NTS)

MT ANGEL, OR

LAST REVISION DATE: SEPT 2013

DETAIL NO. 201

COPYRIGHT 1996
WESTECH ENGINEERING, INC.

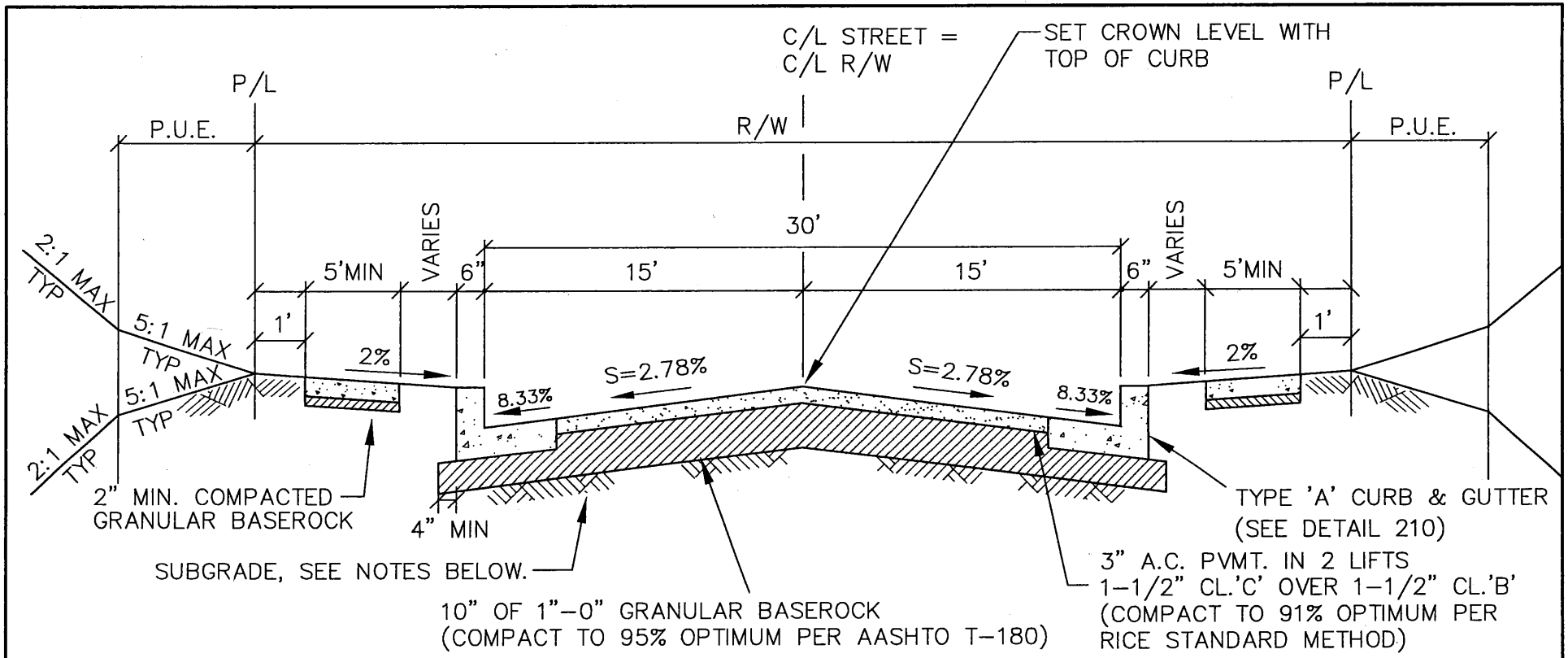

ALT: 1-1/2" OF 3/4"-0" GRANULAR BASEROCK OVER
8-1/2" OF 1-1/2"-0" GRANULAR BASEROCK.

NOTES:

1. ALL DESIGN SUBGRADES SHALL BE COMPACTED AND PROOF-ROLLED PRIOR TO PLACEMENT OF BASEROCK. COMPACTION TESTING OF SUBGRADE MAY BE WAIVED AS OUTLINED UNDER NOTE 3.
2. IF SUBGRADE FAILS THE PROOF-ROLL, SUBGRADE SHALL BE OVEREXCAVATED TO UNDISTURBED SOIL AND BACKFILLED WITH BASEROCK OVER GEOTEXTILE REINFORCEMENT FABRIC (AS SPECIFIED) TO ALLOW COMPACTION OF UPPER (DESIGN) BASEROCK SECTION AND TO MAINTAIN STRUCTURAL INTEGRITY OF NATIVE SUBGRADE SOILS. TYPICAL MIN. OVEREXCAVATION REQUIRED IS 12-INCHES. NO RUBBER TIRED EQUIPMENT ALLOWED ON SUBGRADE FOLLOWING OVEREXCAVATION.
3. IF SUBGRADE PASSES PROOF-ROLL BUT CANNOT BE COMPACTED TO 95% OPTIMUM DENSITY PER AASHTO T-180 (OR IF CONTRACTOR CHOOSES NOT TO TEST), GEOTEXTILE SEPARATION FABRIC (AS SPECIFIED) SHALL BE PLACED ON THE SUBGRADE PRIOR TO PLACEMENT OF THE BASEROCK.
4. REINFORCEMENT FABRIC: NON-WOVEN (MIRAFI 1000N, GEOTEX 1001, LINQ 250EX OR EQUAL), WOVEN (MIRAFI 550X, GEOTEX 250ST, LINQ GTF250 OR EQUAL).
   SEPARATION FABRIC: NON-WOVEN (MIRAFI 160N, GEOTEX 601, LINQ 150EX OR EQUAL), WOVEN (MIRAFI 500X, GEOTEX 200ST, LINQ GTF200 OR EQUAL).

30' RESIDENTIAL CUL-DE-SAC

MINIMUM SECTION

(NTS)

MT ANGEL, OR

LAST REVISION DATE: SEPT 2013

DETAIL NO. 201A

COPYRIGHT 1996
WESTECH ENGINEERING, INC.

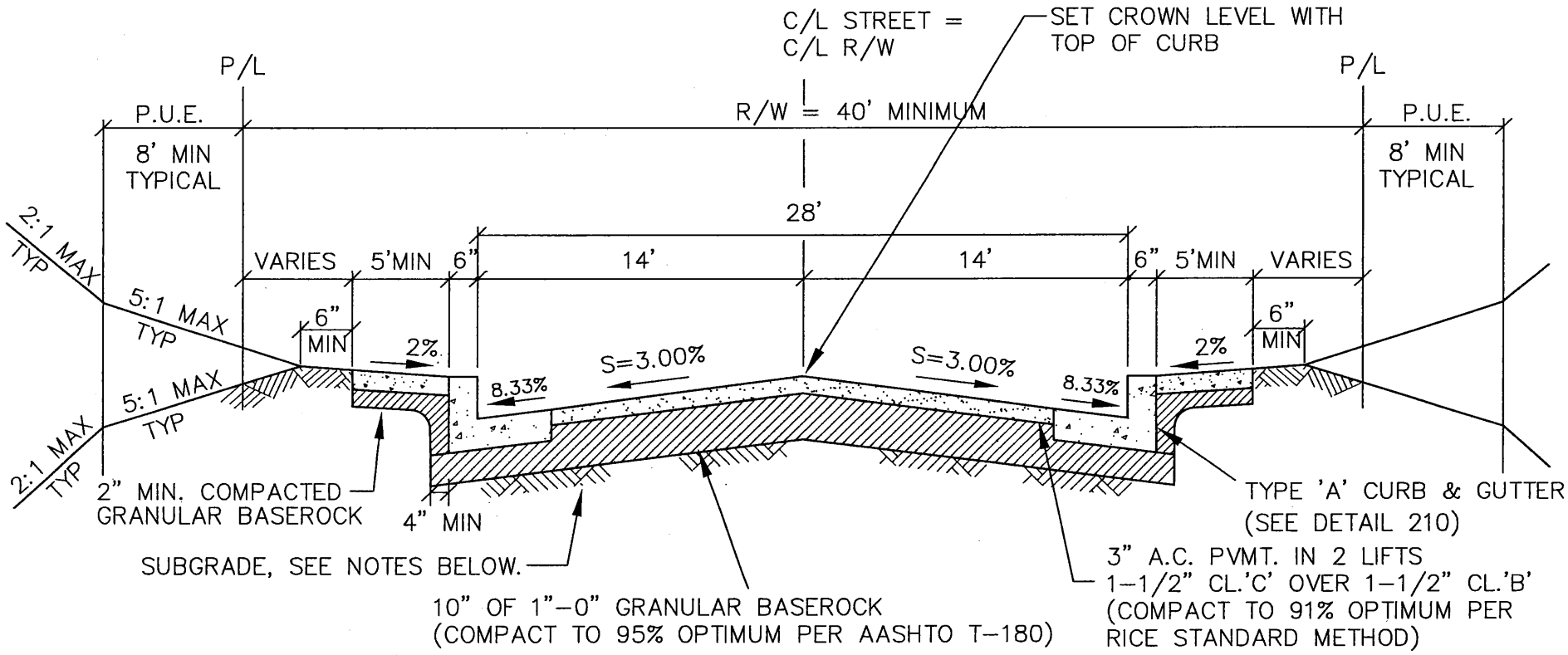

ALT: 1-1/2" OF 3/4"-0" GRANULAR BASEROCK OVER
8-1/2" OF 1-1/2"-0" GRANULAR BASEROCK.

NOTES:

1. ALL DESIGN SUBGRADES SHALL BE COMPACTED AND PROOF-ROLLED PRIOR TO PLACEMENT OF BASEROCK. COMPACTION TESTING OF SUBGRADE MAY BE WAIVED AS OUTLINED UNDER NOTE 3.
2. IF SUBGRADE FAILS THE PROOF-ROLL, SUBGRADE SHALL BE OVEREXCAVATED TO UNDISTURBED SOIL AND BACKFILLED WITH BASEROCK OVER GEOTEXTILE REINFORCEMENT FABRIC (AS SPECIFIED) TO ALLOW COMPACTION OF UPPER (DESIGN) BASEROCK SECTION AND TO MAINTAIN STRUCTURAL INTEGRITY OF NATIVE SUBGRADE SOILS. TYPICAL MIN. OVEREXCAVATION REQUIRED IS 12-INCHES. NO RUBBER TIRED EQUIPMENT ALLOWED ON SUBGRADE FOLLOWING OVEREXCAVATION.
3. IF SUBGRADE PASSES PROOF-ROLL BUT CANNOT BE COMPACTED TO 95% OPTIMUM DENSITY PER AASHTO T-180 (OR IF CONTRACTOR CHOOSES NOT TO TEST), GEOTEXTILE SEPARATION FABRIC (AS SPECIFIED) SHALL BE PLACED ON THE SUBGRADE PRIOR TO PLACEMENT OF THE BASEROCK.
4. REINFORCEMENT FABRIC: NON-WOVEN (MIRAFI 1000N, GEOTEX 1001, LINQ 250EX OR EQUAL), WOVEN (MIRAFI 550X, GEOTEX 250ST, LINQ GTF250 OR EQUAL).
   SEPARATION FABRIC: NON-WOVEN (MIRAFI 160N, GEOTEX 601, LINQ 150EX OR EQUAL), WOVEN (MIRAFI 500X, GEOTEX 200ST, LINQ GTF200 OR EQUAL).

28' RESIDENTIAL INFILL STREET
IN EXISTING RIGHT-OF-WAY
MINIMUM SECTION
(NTS)

MT ANGEL, OR

DETAIL NO.
201B

LAST REVISION DATE:
SEPT 2013

COPYRIGHT 1996
WESTECH ENGINEERING, INC.

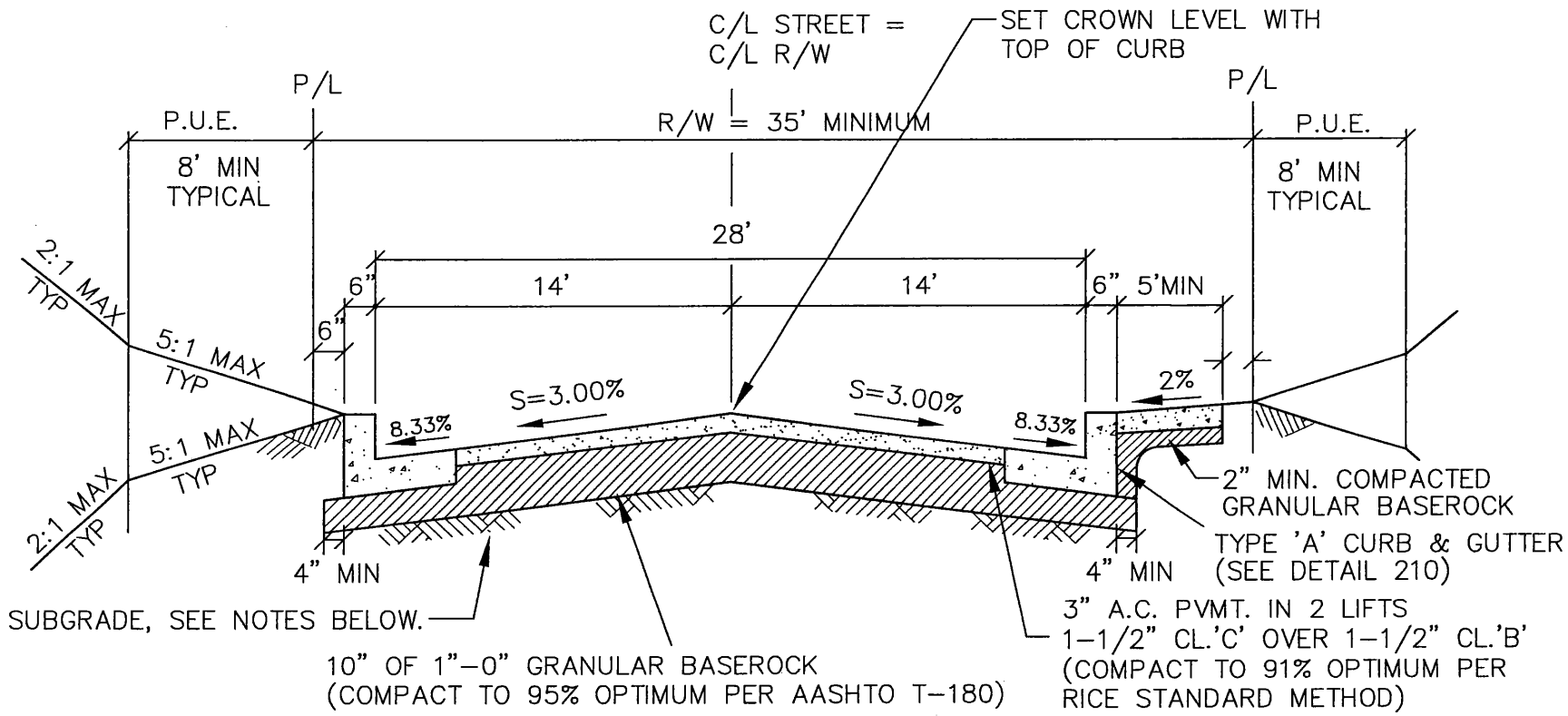

ALT: 1-1/2" OF 3/4"-0" GRANULAR BASEROCK OVER
8-1/2" OF 1-1/2"-0" GRANULAR BASEROCK.

NOTES:

1. ALL DESIGN SUBGRADES SHALL BE COMPACTED AND PROOF-ROLLED PRIOR TO PLACEMENT OF BASEROCK. COMPACTION TESTING OF SUBGRADE MAY BE WAIVED AS OUTLINED UNDER NOTE 3.
2. IF SUBGRADE FAILS THE PROOF-ROLL, SUBGRADE SHALL BE OVEREXCAVATED TO UNDISTURBED SOIL AND BACKFILLED WITH BASEROCK OVER GEOTEXTILE REINFORCEMENT FABRIC (AS SPECIFIED) TO ALLOW COMPACTION OF UPPER (DESIGN) BASEROCK SECTION AND TO MAINTAIN STRUCTURAL INTEGRITY OF NATIVE SUBGRADE SOILS. TYPICAL MIN. OVEREXCAVATION REQUIRED IS 12-INCHES. NO RUBBER TIRED EQUIPMENT ALLOWED ON SUBGRADE FOLLOWING OVEREXCAVATION.
3. IF SUBGRADE PASSES PROOF-ROLL BUT CANNOT BE COMPACTED TO 95% OPTIMUM DENSITY PER AASHTO T-180 (OR IF CONTRACTOR CHOOSES NOT TO TEST), GEOTEXTILE SEPARATION FABRIC (AS SPECIFIED) SHALL BE PLACED ON THE SUBGRADE PRIOR TO PLACEMENT OF THE BASEROCK.
4. REINFORCEMENT FABRIC: NON-WOVEN (MIRAFI 1000N, GEOTEX 1001, LINQ 250EX OR EQUAL), WOVEN (MIRAFI 550X, GEOTEX 250ST, LINQ GTF250 OR EQUAL).
   SEPARATION FABRIC: NON-WOVEN (MIRAFI 160N, GEOTEX 601, LINQ 150EX OR EQUAL), WOVEN (MIRAFI 500X, GEOTEX 200ST, LINQ GTF200 OR EQUAL).

MT ANGEL, OR	28' RESIDENTIAL INFILL STREET IN NEW RIGHT-OF-WAY MINIMUM SECTION (NTS)	LAST REVISION DATE: SEPT 2013
DETAIL NO. 201C		COPYRIGHT 1996 WESTECH ENGINEERING, INC.

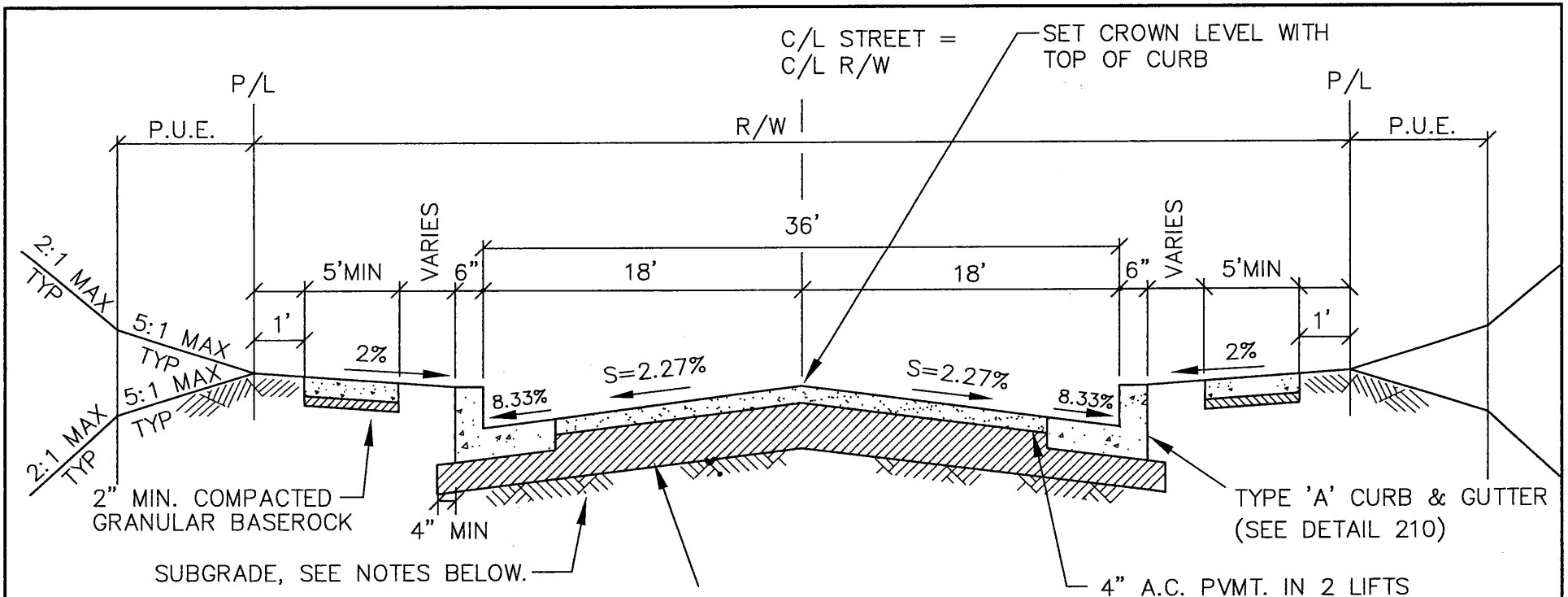

NOTES:

1. ALL DESIGN SUBGRADES SHALL BE COMPACTED AND PROOF-ROLLED PRIOR TO PLACEMENT OF BASEROCK. COMPACTION TESTING OF SUBGRADE MAY BE WAIVED AS OUTLINED UNDER NOTE 3.
2. IF SUBGRADE FAILS THE PROOF-ROLL, SUBGRADE SHALL BE OVEREXCAVATED TO UNDISTURBED SOIL AND BACKFILLED WITH BASEROCK OVER GEOTEXTILE REINFORCEMENT FABRIC (AS SPECIFIED) TO ALLOW COMPACTION OF UPPER (DESIGN) BASEROCK SECTION AND TO MAINTAIN STRUCTURAL INTEGRITY OF NATIVE SUBGRADE SOILS. TYPICAL MIN. OVEREXCAVATION REQUIRED IS 12-INCHES. NO RUBBER TIRED EQUIPMENT ALLOWED ON SUBGRADE FOLLOWING OVEREXCAVATION.
3. IF SUBGRADE PASSES PROOF-ROLL BUT CANNOT BE COMPACTED TO 95% OPTIMUM DENSITY PER AASHTO T-180 (OR IF CONTRACTOR CHOOSES NOT TO TEST), GEOTEXTILE SEPARATION FABRIC (AS SPECIFIED) SHALL BE PLACED ON THE SUBGRADE PRIOR TO PLACEMENT OF THE BASEROCK.
4. REINFORCEMENT FABRIC: NON-WOVEN (MIRAFI 1000N, GEOTEX 1001, LINQ 250EX OR EQUAL), WOVEN (MIRAFI 550X, GEOTEX 250ST, LINQ GTF250 OR EQUAL).
   SEPARATION FABRIC: NON-WOVEN (MIRAFI 160N, GEOTEX 601, LINQ 150EX OR EQUAL), WOVEN (MIRAFI 500X, GEOTEX 200ST, LINQ GTF200 OR EQUAL).

MT ANGEL, OR	36' MINOR COLLECTOR STREET MINIMUM SECTION (NTS)	LAST REVISION DATE: SEPT 2013
DETAIL NO. 202		COPYRIGHT 1996 WESTECH ENGINEERING, INC.

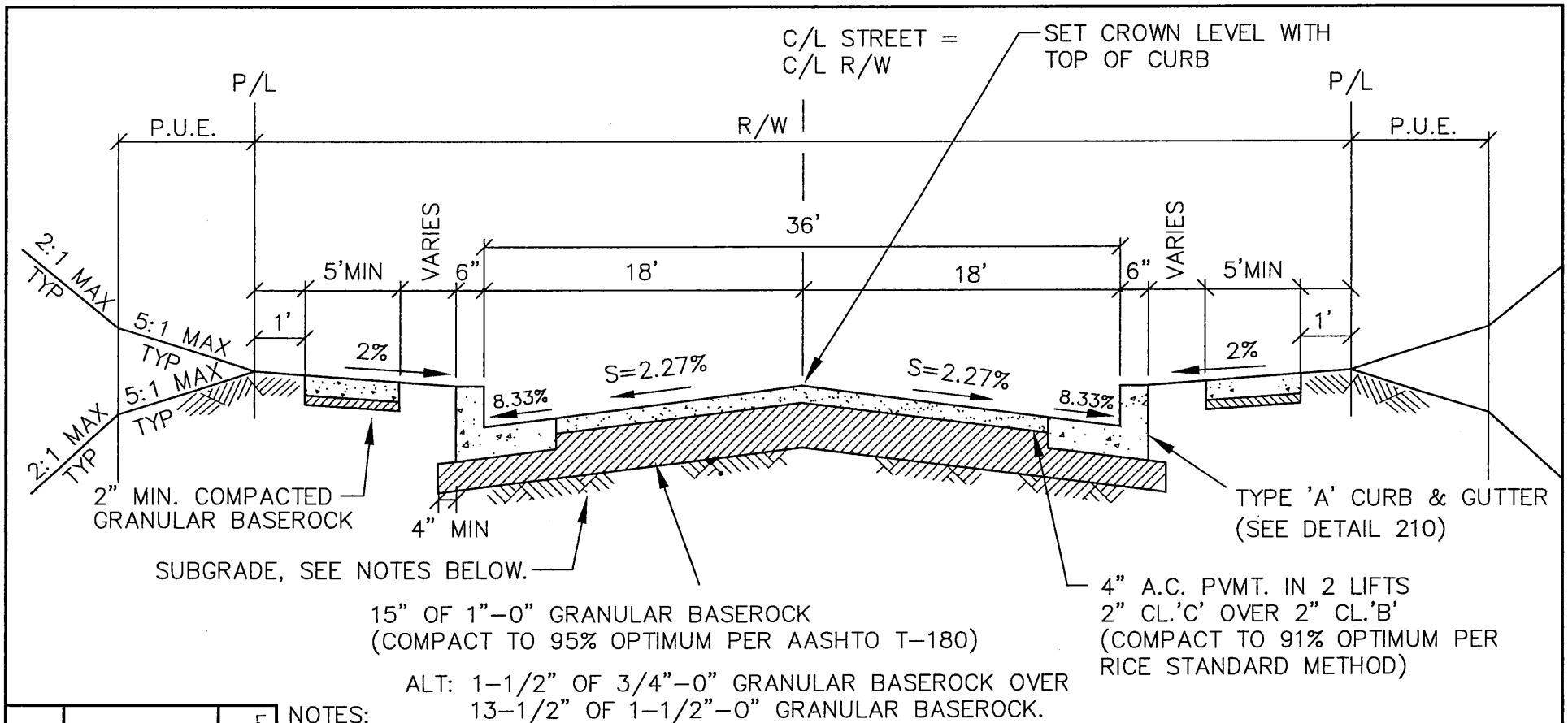

NOTES:

1. ALL DESIGN SUBGRADES SHALL BE COMPACTED AND PROOF-ROLLED PRIOR TO PLACEMENT OF BASEROCK. COMPACTION TESTING OF SUBGRADE MAY BE WAIVED AS OUTLINED UNDER NOTE 3.
2. IF SUBGRADE FAILS THE PROOF-ROLL, SUBGRADE SHALL BE OVEREXCAVATED TO UNDISTURBED SOIL AND BACKFILLED WITH BASEROCK OVER GEOTEXTILE REINFORCEMENT FABRIC (AS SPECIFIED) TO ALLOW COMPACTION OF UPPER (DESIGN) BASEROCK SECTION AND TO MAINTAIN STRUCTURAL INTEGRITY OF NATIVE SUBGRADE SOILS. TYPICAL MIN. OVEREXCAVATION REQUIRED IS 12-INCHES. NO RUBBER TIRED EQUIPMENT ALLOWED ON SUBGRADE FOLLOWING OVEREXCAVATION.
3. IF SUBGRADE PASSES PROOF-ROLL BUT CANNOT BE COMPACTED TO 95% OPTIMUM DENSITY PER AASHTO T-180 (OR IF CONTRACTOR CHOOSES NOT TO TEST), GEOTEXTILE SEPARATION FABRIC (AS SPECIFIED) SHALL BE PLACED ON THE SUBGRADE PRIOR TO PLACEMENT OF THE BASEROCK.
4. REINFORCEMENT FABRIC: NON-WOVEN (MIRAFI 1000N, GEOTEX 1001, LINQ 250EX OR EQUAL), WOVEN (MIRAFI 550X, GEOTEX 250ST, LINQ GTF250 OR EQUAL).
   SEPARATION FABRIC: NON-WOVEN (MIRAFI 160N, GEOTEX 601, LINQ 150EX OR EQUAL), WOVEN (MIRAFI 500X, GEOTEX 200ST, LINQ GTF200 OR EQUAL).

MT ANGEL, OR	36' MAJOR COLLECTOR STREET MINIMUM SECTION (NTS)	LAST REVISION DATE: SEPT 2013
DETAIL NO. 202A		COPYRIGHT 1996 WESTECH ENGINEERING, INC.

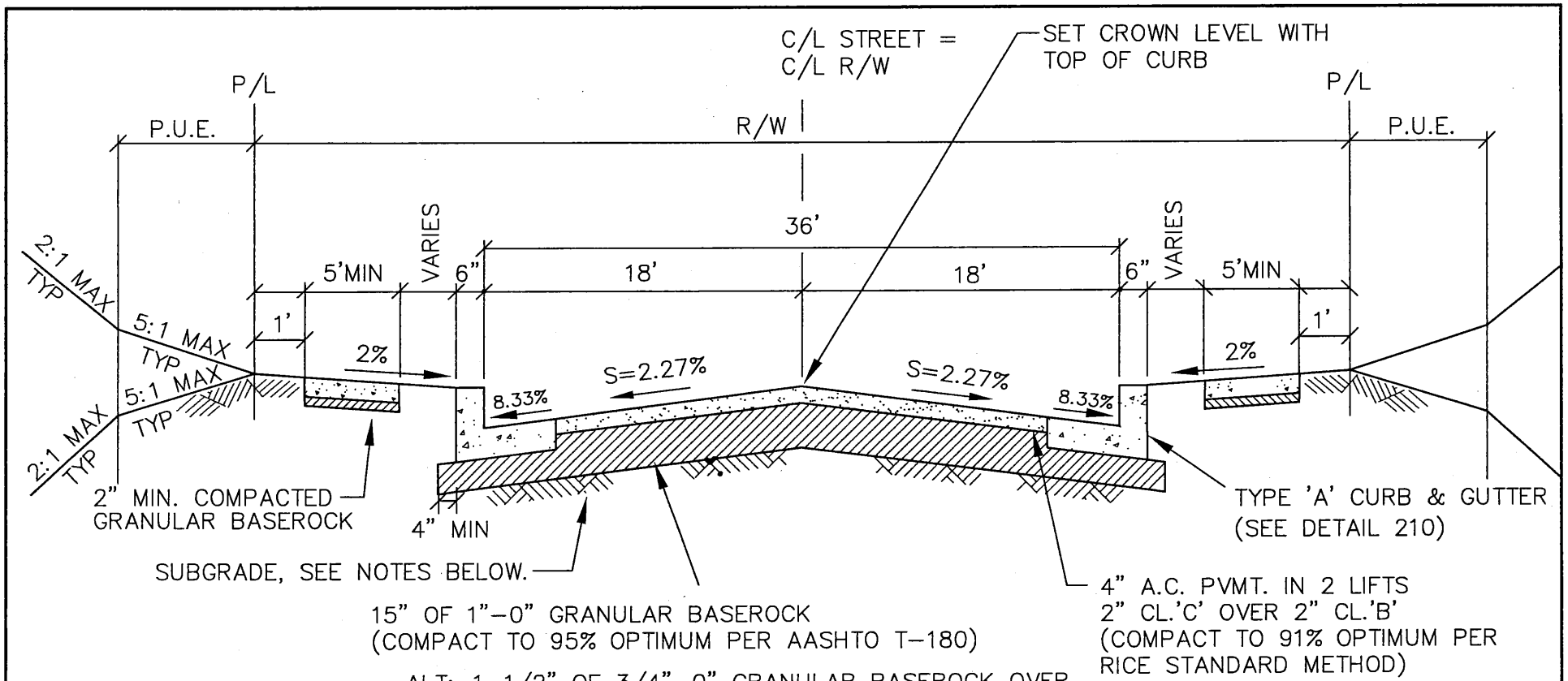

NOTES:

1. ALL DESIGN SUBGRADES SHALL BE COMPACTED AND PROOF-ROLLED PRIOR TO PLACEMENT OF BASEROCK. COMPACTION TESTING OF SUBGRADE MAY BE WAIVED AS OUTLINED UNDER NOTE 3.
2. IF SUBGRADE FAILS THE PROOF-ROLL, SUBGRADE SHALL BE OVEREXCAVATED TO UNDISTURBED SOIL AND BACKFILLED WITH BASEROCK OVER GEOTEXTILE REINFORCEMENT FABRIC (AS SPECIFIED) TO ALLOW COMPACTION OF UPPER (DESIGN) BASEROCK SECTION AND TO MAINTAIN STRUCTURAL INTEGRITY OF NATIVE SUBGRADE SOILS. TYPICAL MIN. OVEREXCAVATION REQUIRED IS 12-INCHES. NO RUBBER TIRED EQUIPMENT ALLOWED ON SUBGRADE FOLLOWING OVEREXCAVATION.
3. IF SUBGRADE PASSES PROOF-ROLL BUT CANNOT BE COMPACTED TO 95% OPTIMUM DENSITY PER AASHTO T-180 (OR IF CONTRACTOR CHOOSES NOT TO TEST), GEOTEXTILE SEPARATION FABRIC (AS SPECIFIED) SHALL BE PLACED ON THE SUBGRADE PRIOR TO PLACEMENT OF THE BASEROCK.
4. REINFORCEMENT FABRIC: NON-WOVEN (MIRAFI 1000N, GEOTEX 1001, LINQ 250EX OR EQUAL), WOVEN (MIRAFI 550X, GEOTEX 250ST, LINQ GTF250 OR EQUAL).
   SEPARATION FABRIC: NON-WOVEN (MIRAFI 160N, GEOTEX 601, LINQ 150EX OR EQUAL), WOVEN (MIRAFI 500X, GEOTEX 200ST, LINQ GTF200 OR EQUAL).

MT ANGEL, OR	36' COMMERCIAL/INDUSTRIAL STREET MINIMUM SECTION (NTS)	LAST REVISION DATE: SEPT 2013
DETAIL NO. 203		COPYRIGHT 1996 WESTECH ENGINEERING, INC.

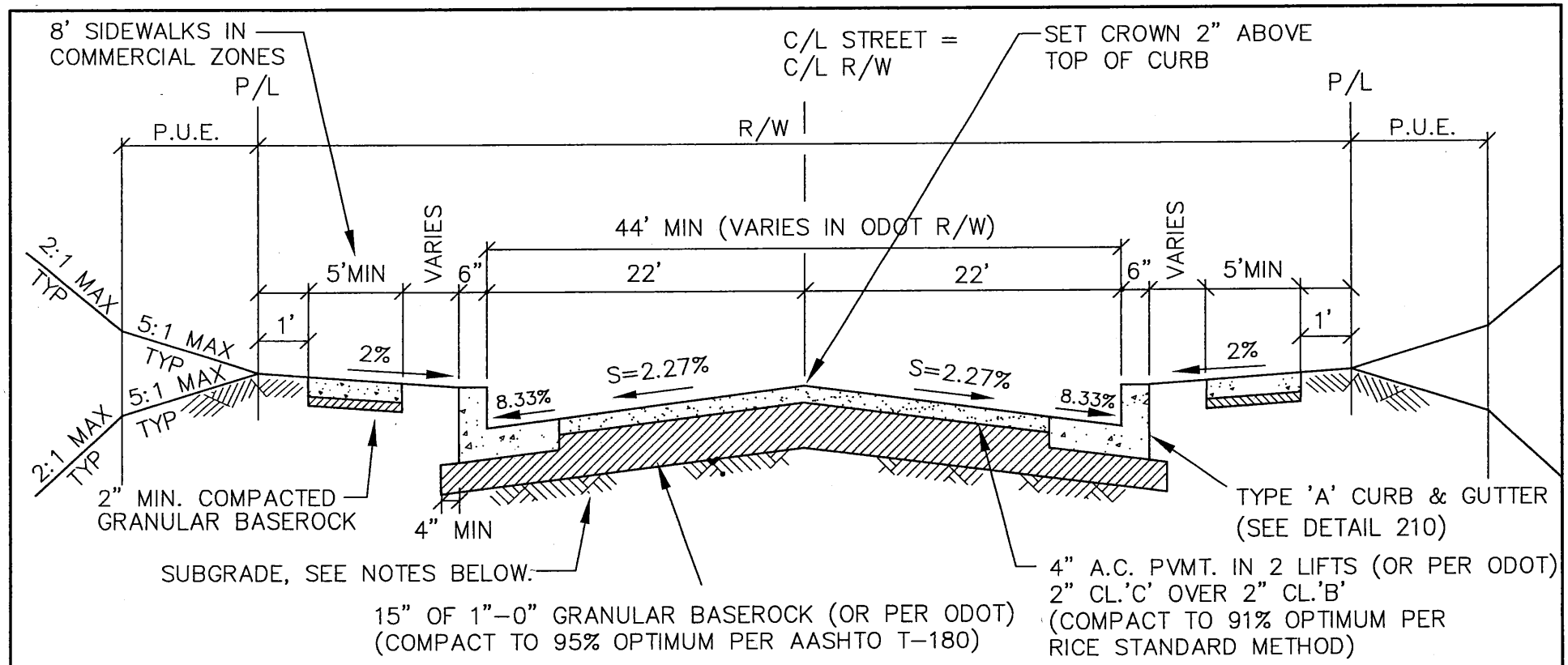

ALT: 1-1/2" OF 3/4"-0" GRANULAR BASEROCK OVER 13-1/2" OF 1-1/2"-0" GRANULAR BASEROCK.

NOTES:

1. ALL DESIGN SUBGRADES SHALL BE COMPACTED AND PROOF-ROLLED PRIOR TO PLACEMENT OF BASEROCK. COMPACTION TESTING OF SUBGRADE MAY BE WAIVED AS OUTLINED UNDER NOTE 3.
2. IF SUBGRADE FAILS THE PROOF-ROLL, SUBGRADE SHALL BE OVEREXCAVATED TO UNDISTURBED SOIL AND BACKFILLED WITH BASEROCK OVER GEOTEXTILE REINFORCEMENT FABRIC (AS SPECIFIED) TO ALLOW COMPACTION OF UPPER (DESIGN) BASEROCK SECTION AND TO MAINTAIN STRUCTURAL INTEGRITY OF NATIVE SUBGRADE SOILS. TYPICAL MIN. OVEREXCAVATION REQUIRED IS 12-INCHES. NO RUBBER TIRED EQUIPMENT ALLOWED ON SUBGRADE FOLLOWING OVEREXCAVATION.
3. IF SUBGRADE PASSES PROOF-ROLL BUT CANNOT BE COMPACTED TO 95% OPTIMUM DENSITY PER AASHTO T-180 (OR IF CONTRACTOR CHOOSES NOT TO TEST), GEOTEXTILE SEPARATION FABRIC (AS SPECIFIED) SHALL BE PLACED ON THE SUBGRADE PRIOR TO PLACEMENT OF THE BASEROCK.
4. REINFORCEMENT FABRIC: NON-WOVEN (MIRAFI 1000N, GEOTEX 1001, LINQ 250EX OR EQUAL), WOVEN (MIRAFI 550X, GEOTEX 250ST, LINQ GTF250 OR EQUAL).
   SEPARATION FABRIC: NON-WOVEN (MIRAFI 160N, GEOTEX 601, LINQ 150EX OR EQUAL), WOVEN (MIRAFI 500X, GEOTEX 200ST, LINQ GTF200 OR EQUAL).

MT ANGEL, OR	44' ARTERIAL STREET MINIMUM SECTION (NTS)	LAST REVISION DATE: SEPT 2013
DETAIL NO. 204		COPYRIGHT 1996 WESTECH ENGINEERING, INC.

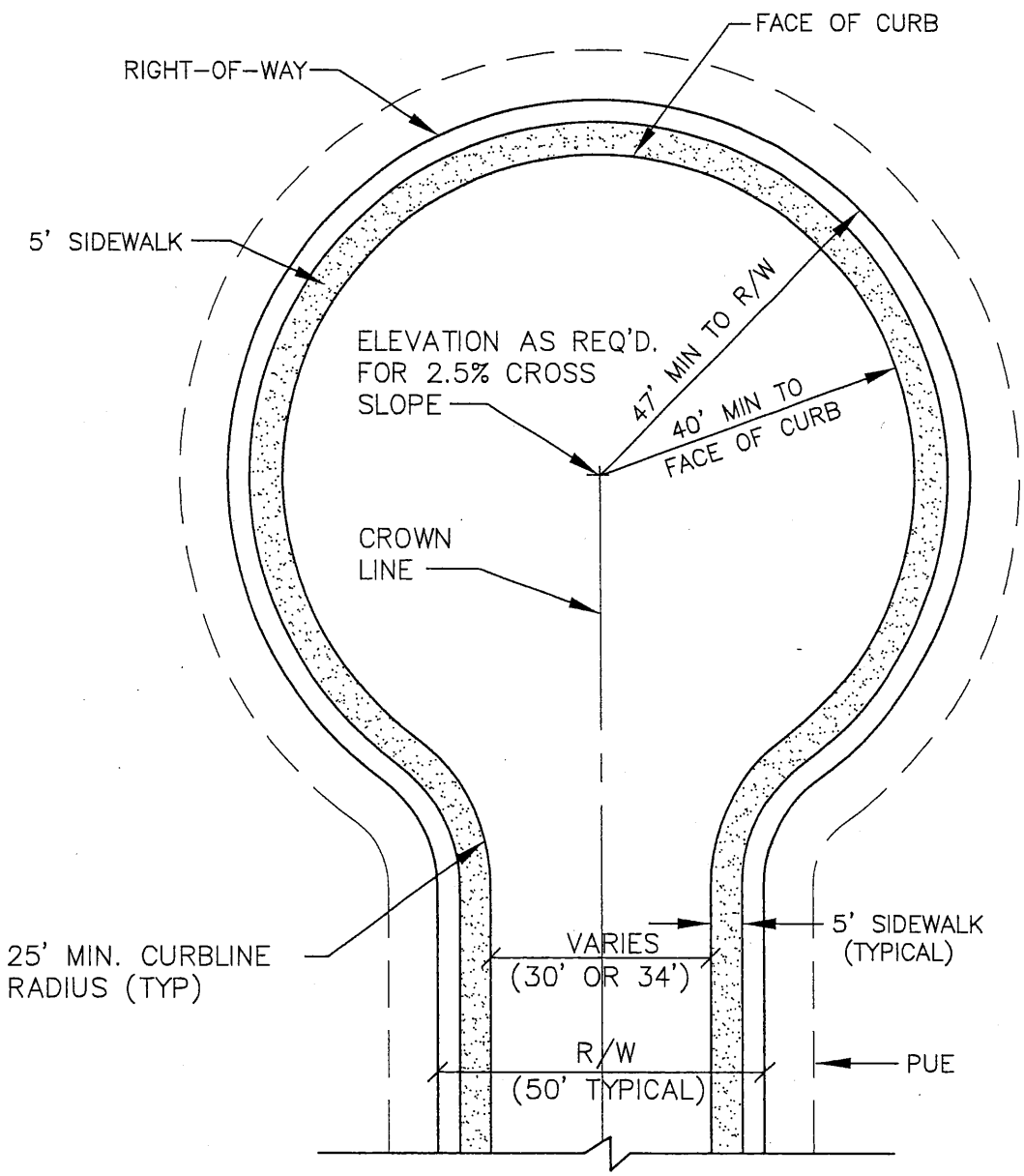

NOTES:

1. 2.5% MIN. CROSS SLOPE REQUIRED FROM CENTER OF BULB TO GUTTER.
2. MAINTAIN CROWN LINE TO CENTER OF CUL-DE-SAC BULB.
3. 34' STREET WIDTH REQUIRED FOR CUL-DE-SACS LONGER THAN 400'.

LAST REVISION DATE: SEPT 2013	COPYRIGHT 1996 WESTECH ENGINEERING, INC.
STANDARD CUL-DE-SAC (RESIDENTIAL) (NTS)	
MT ANGEL, OR	DETAIL NO. 205

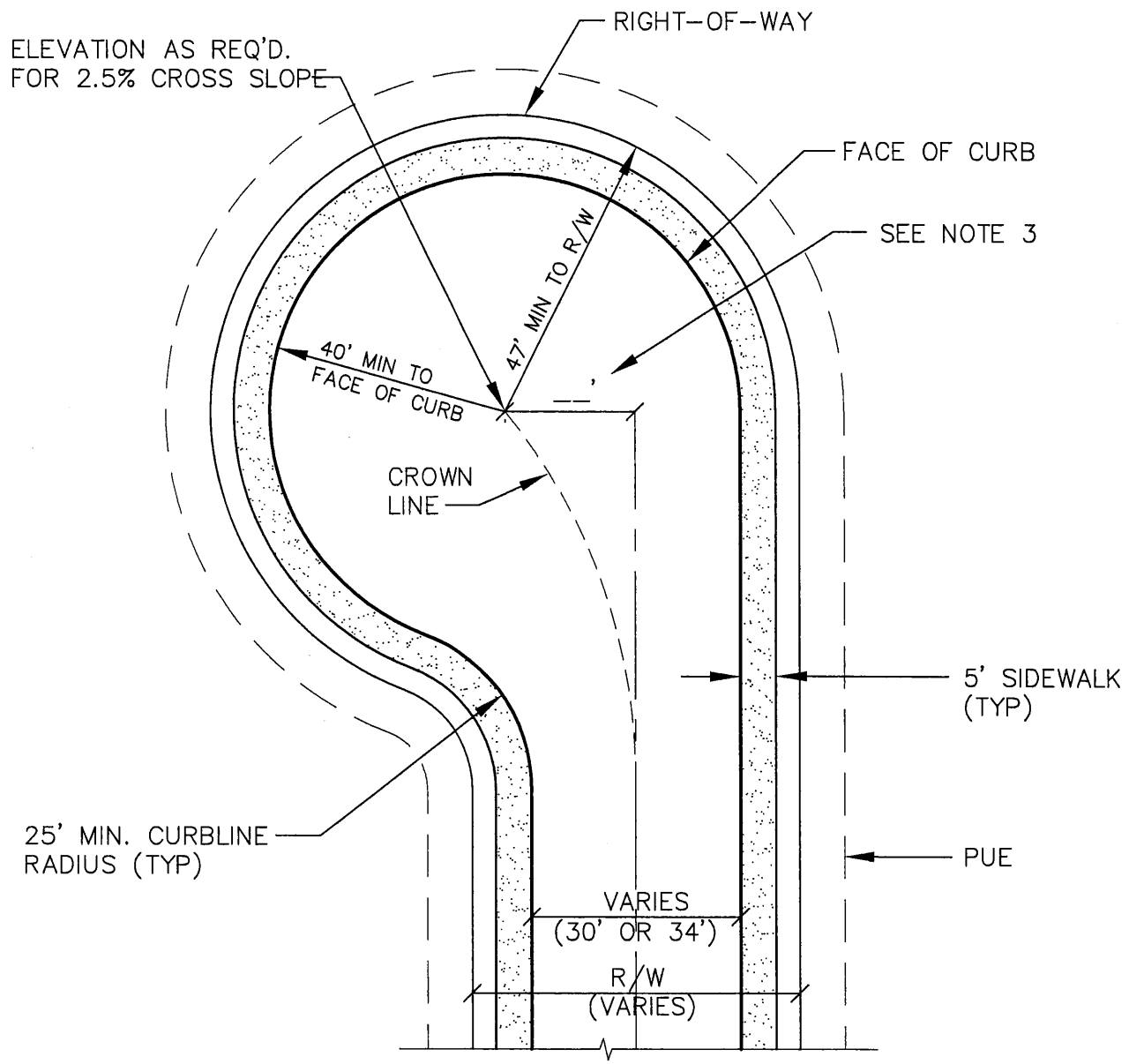

NOTES:

1. 2.5% MIN. CROSS SLOPE REQUIRED FROM CENTER OF BULB TO GUTTER.
2. MAINTAIN CROWN LINE TO CENTER OF CUL-DE-SAC BULB.
3. OFFSET FROM ROADWAY CENTERLINE TO CENTER OF BULB = CURB RADIUS MINUS ONE-HALF STREET WIDTH.
4. 34' STREET WIDTH REQUIRED FOR CUL-DE-SACS LONGER THAN 400'.

LAST REVISION DATE: SEPT 2013	COPYRIGHT 1996 WESTECH ENGINEERING, INC.
OFFSET CUL-DE-SAC (RESIDENTIAL) (NTS)	
MT ANGEL, OR	DETAIL NO. 206

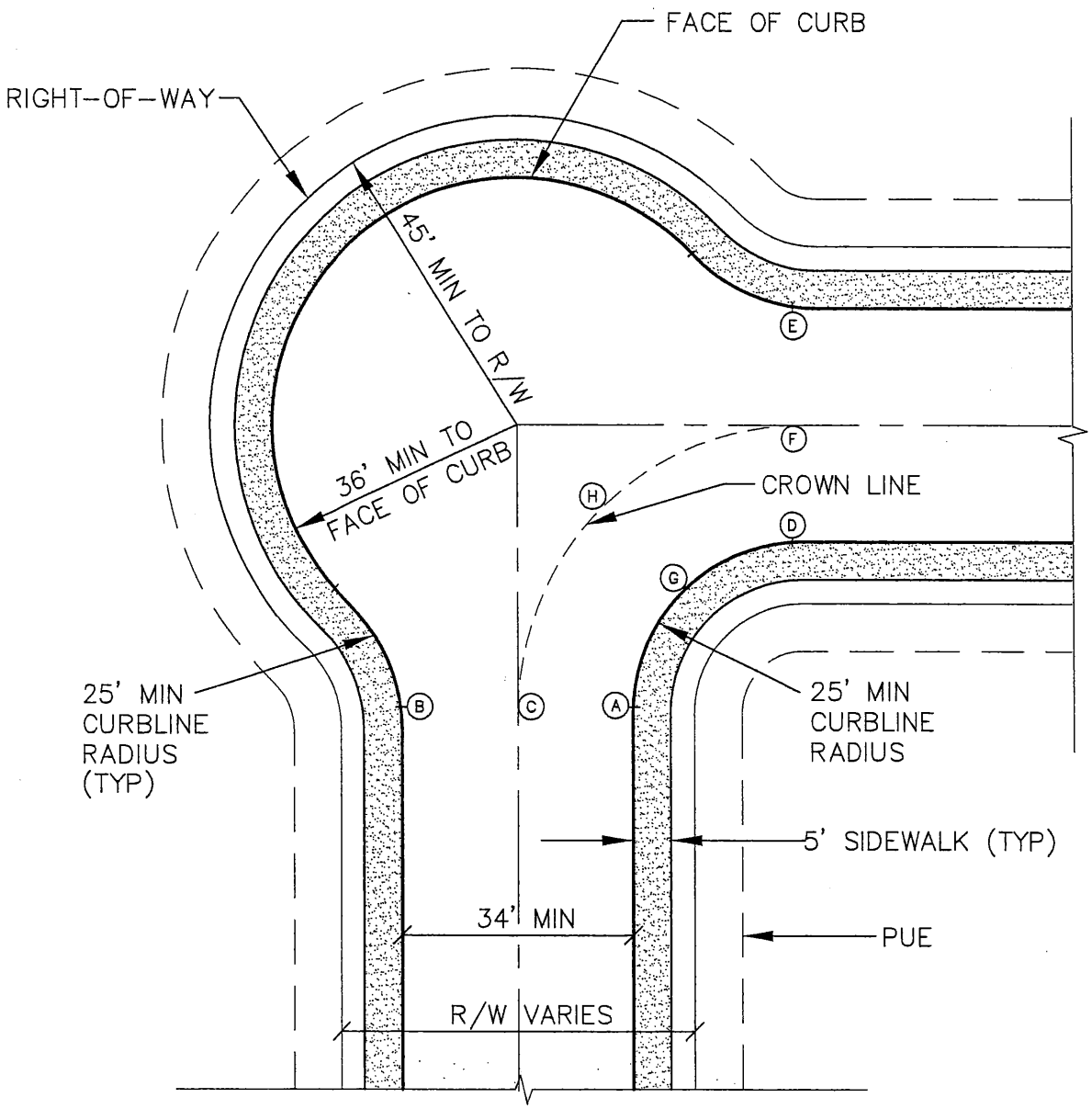

NOTES:

1. TOP CURB @ A = TOP CURB @ B = CROWN @ C
   TOP CURB @ D = TOP CURB @ E = CROWN @ F
3. MIN. GUTTER SLOPE FROM E TO B = 0.75%
4. SET CROWN @ H 0.25' MIN. ABOVE TOP CURB @ G (4% MIN. CROSS SLOPE FROM H TO G)

LAST REVISION DATE: SEPTEMBER 1996	COPYRIGHT 1996 WESTECH ENGINEERING, INC.
EYEBROW CUL-DE-SAC (RESIDENTIAL) (NTS)	
MT ANGEL, OR	DETAIL NO. 207

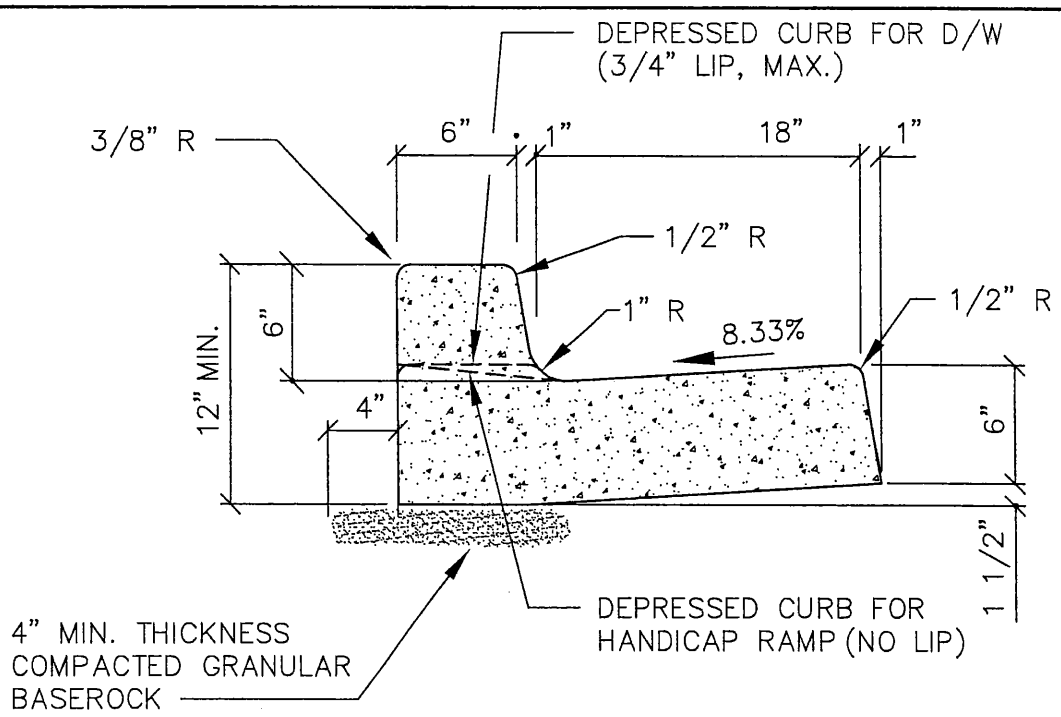

TYPE A CURB & GUTTER

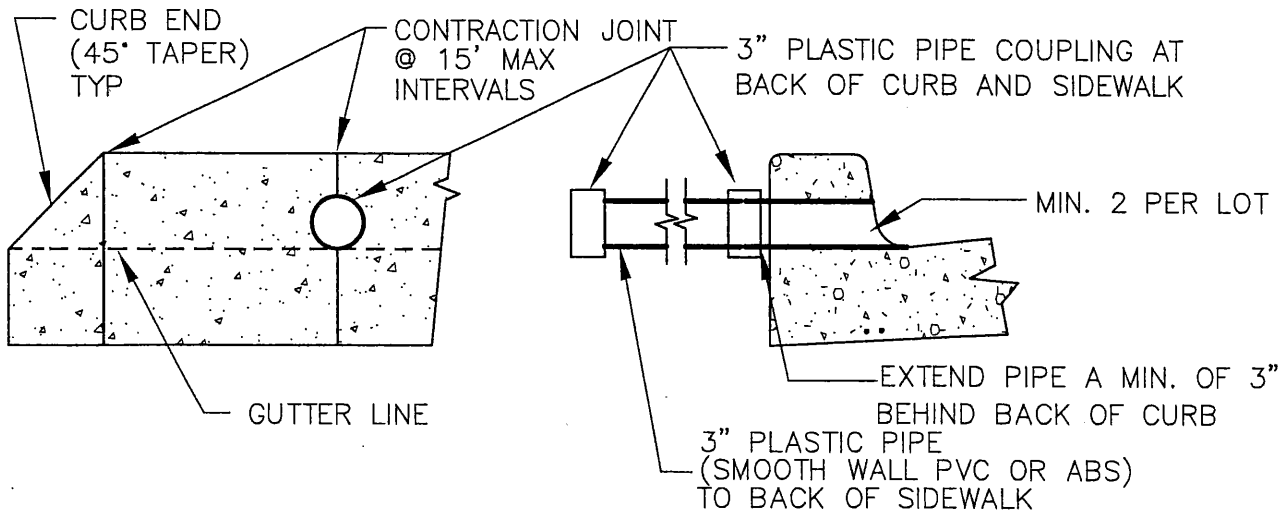

WEEP HOLE THROUGH CURB

NOTES:

1. CONTRACTION JOINTS SHALL BE PLACED AT 15' MIN. INTERVALS AND SHALL EXTEND AT LEAST 50% THROUGH THE CURB OR CURB AND GUTTER.
2. A CONTRACTION JOINT SHALL BE PLACED ALONG AND OVER WEEP HOLE THROUGH THE SIDEWALK.
3. ALL CONCRETE SHALL BE 3300 PSI @ 28 DAYS.
4. WHERE SIDEWALKS ARE TO BE CONSTRUCTED, EXTEND 3" PIPE TO BACK OF SIDEWALK LOCATION & INSTALL COUPLING.
5. INSTALL MIN. 2 WEEP HOLES ON ALL LOTS. ONE WEEP HOLE TO BE AT LOW POINT OF LOT, 5' FROM P/L. WEEPHOLES IN EXISTING CURBS SHALL BE CORE DRILLED.

LAST REVISION DATE: SEPT 2013	COPYRIGHT 1996 WESTECH ENGINEERING, INC.
TYPE 'A' CURB AND GUTTER AND WEEP HOLE (NTS)	
MT ANGEL, OR	DETAIL NO. 210

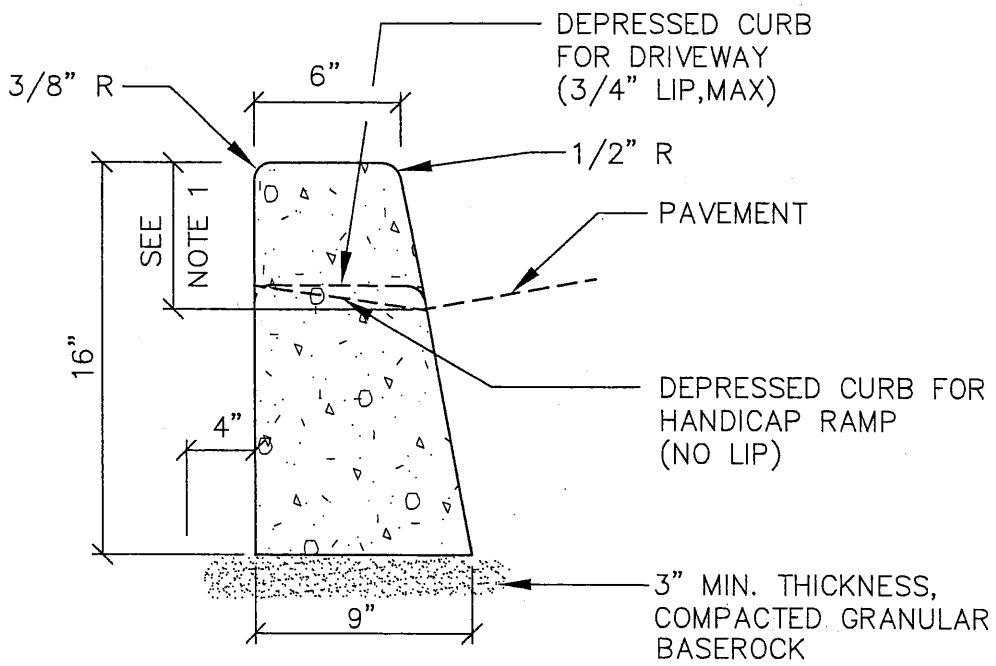

TYPE 'C' CURB

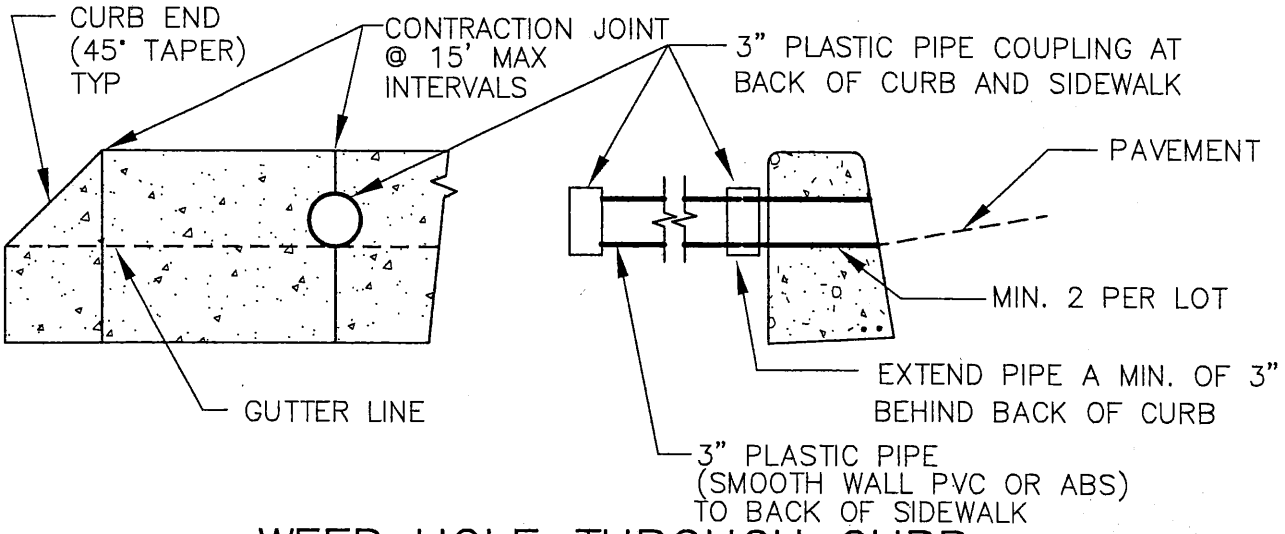

WEEP HOLE THROUGH CURB

NOTES

1. 7" CURB EXPOSURE FOR ARTERIAL & COLLECTOR STREETS WHERE TYPE C CURB ALLOWED. 6" EXPOSURE ALL OTHER PUBLIC STREETS, PRIVATE STREETS & PARKING LOTS.
2. A CONTRACTION JOINT SHALL BE PLACED ALONG AND OVER WEEP HOLE THROUGH THE SIDEWALK.
3. ALL CONCRETE SHALL BE 3300 PSI @ 28 DAYS.
4. WHERE SIDEWALKS ARE TO BE CONSTRUCTED, EXTEND 3" PIPE TO BACK OF SIDEWALK LOCATION & INSTALL COUPLING.
5. INSTALL MIN. 2 WEEP HOLES ON ALL LOTS. ONE WEEP HOLE TO BE AT LOW POINT OF LOT, 5' FROM P/L. WEEP HOLES IN EXISTING CURBS SHALL BE CORE DRILLED.

LAST REVISION DATE: SEPT 2013	COPYRIGHT 1996 WESTECH ENGINEERING, INC.
TYPE 'C' CURB AND WEEPHOLE (NTS)	
MT ANGEL, OR	DETAIL NO. 211

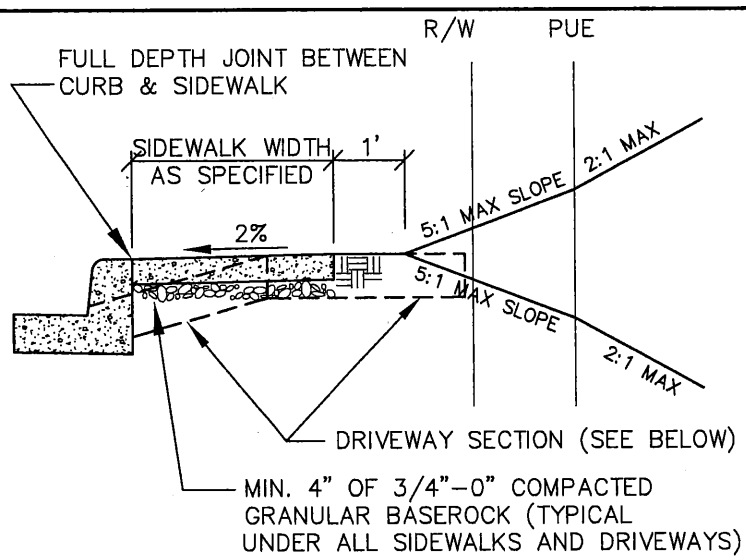

TYP. CROSS SECTION

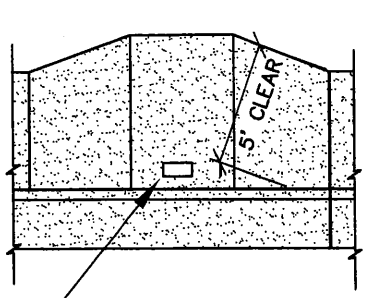

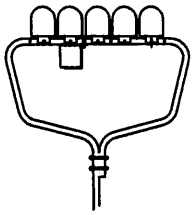

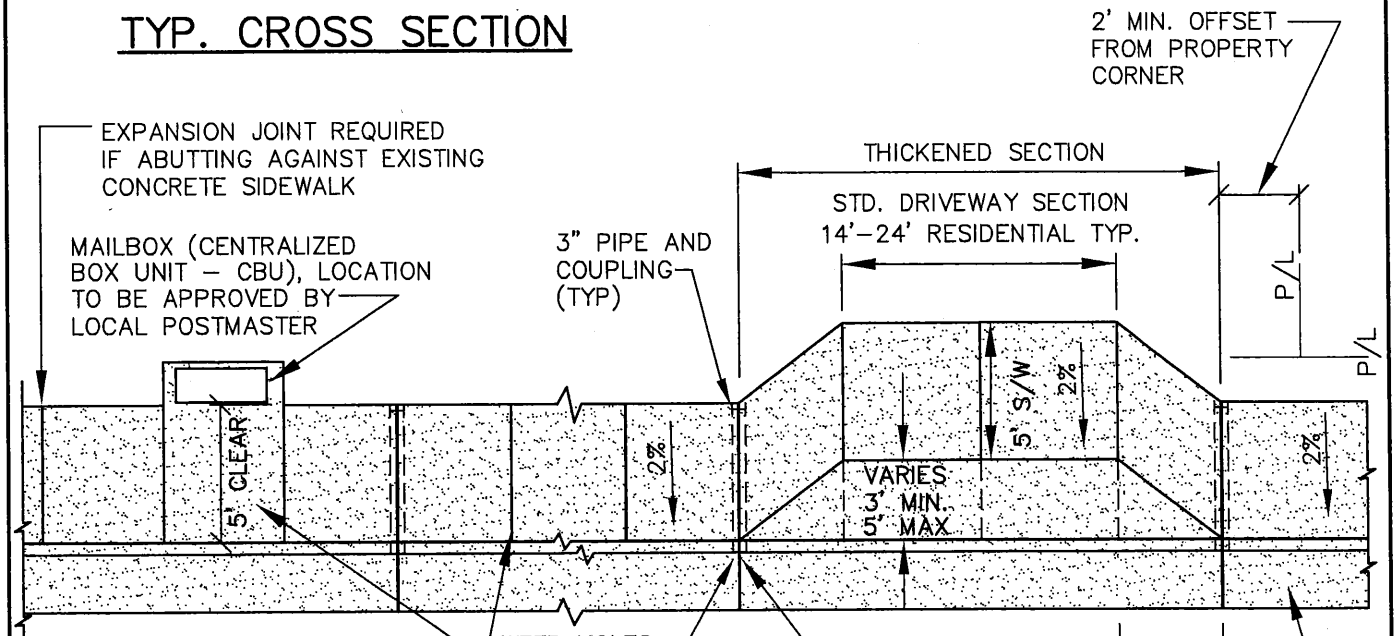

TYP. PLAN VIEW

NOTES:

1. CONCRETE DEPTH FOR STANDARD SIDEWALKS SHALL BE 4" MIN.
2. SIDEWALKS THROUGH RESIDENTIAL DRIVEWAYS (INCLUDING WINGS) SHALL BE 6" MIN. THICKNESS. COMMERCIAL DRIVEWAYS SHALL BE 8" MIN. THICK.
3. SIDEWALKS 8' & WIDER SHALL HAVE A LONGITUDINAL CONTRACTION JOINT AT MIDPOINT.
4. CONCRETE SHALL BE 3300 PSI @ 28 DAYS.
5. PCC APRONS JOINTED TO MATCH SIDEWALK PATTERN.
6. SIDEWALKS SHALL BE LOCATED ENTIRELY WITHIN PUBLIC RIGHT-OF-WAY OR SIDEWALK EASEMENTS, INCLUDING AT DRIVEWAYS & INTERSECTIONS.
7. ADA ACCESS TO CBU MAILBOXES SHALL CONFORM WITH SECTION 1111 OF OSSC (OREGON STRUCTURAL SPECIALTY CODE).

LAST REVISION DATE: SEPT 2013	COPYRIGHT 1996 WESTECH ENGINEERING, INC.
CURBLINE SIDEWALKS AND DRIVEWAY APRONS (NTS)	
MT ANGEL, OR	DETAIL NO. 212

NOTE:
CONTRACTION JOINT REQUIRED
AT BOTH SIDES OF DRIVEWAY
AND OVER ROOF DRAINS

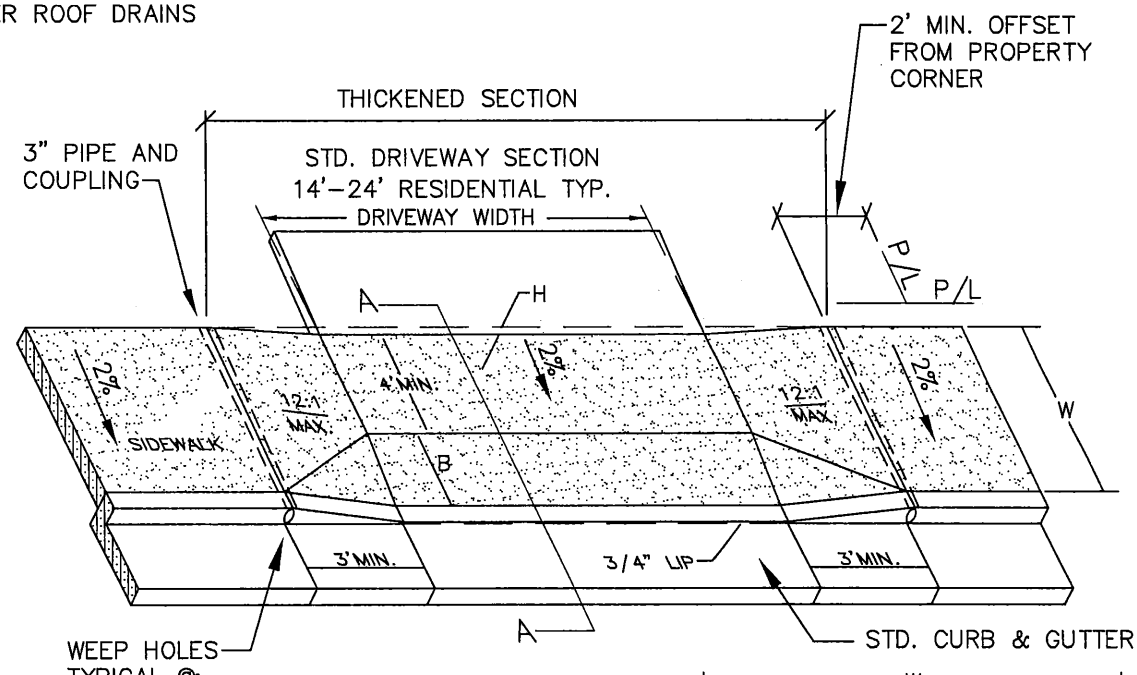

W	B	H	
5'	1'	0.27'	(3-1/4")
6'	2'	0.23'	(2-3/4")
7'	3'	0.19'	(2-1/4")

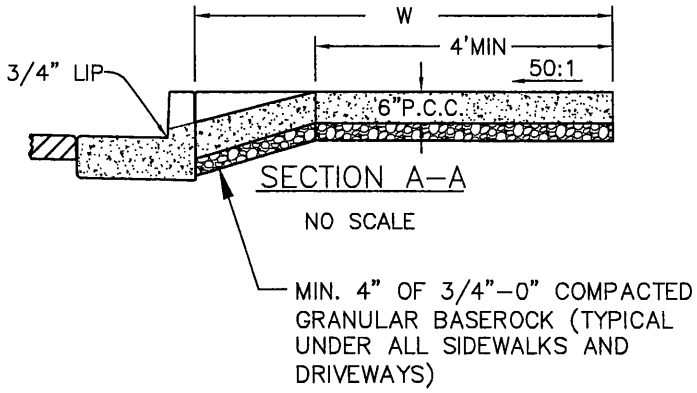

NOTES:

1. SEE DETAIL 212 FOR STANDARD APRON & SIDEWALK DETAILS. USE OF THIS DETAIL REQUIRES SPECIFIC APPROVAL BY PUBLIC WORKS PRIOR TO FORMING.
2. CONCRETE DEPTH FOR STANDARD SIDEWALKS SHALL BE 4" MIN.
3. SF & DUPLEX RESIDENTIAL DRIVEWAY SECTIONS INCLUDING SIDEWALKS THROUGH DRIVEWAYS SHALL BE 6" MIN. THICKNESS.
4. CONCRETE SHALL BE 3300 PSI @ 28 DAYS.
5. PCC APRONS SHALL BE JOINTED TO MATCH SIDEWALK PATTERN.
6. PUBLIC SIDEWALKS SHALL BE LOCATED ENTIRELY WITHIN RIGHT-OF-WAY OR SIDEWALK EASEMENTS, INCLUDING SIDEWALKS THROUGH DRIVEWAY APRONS & AT CORNERS.
7. 2% CROSS SLOPE IS MEASURED FROM HORIZONTAL. 12:1 SIDEWALK SLOPE IS RELATIVE TO THE RUNNING SLOPE OF THE SIDEWALK.

LAST REVISION DATE: SEPT 2013	
RESIDENTIAL D/W APRON CURBLINE SIDEWALK STEEP UPHILL LOTS ONLY (NTS)	
MT ANGEL, OR	DETAIL NO. 212A

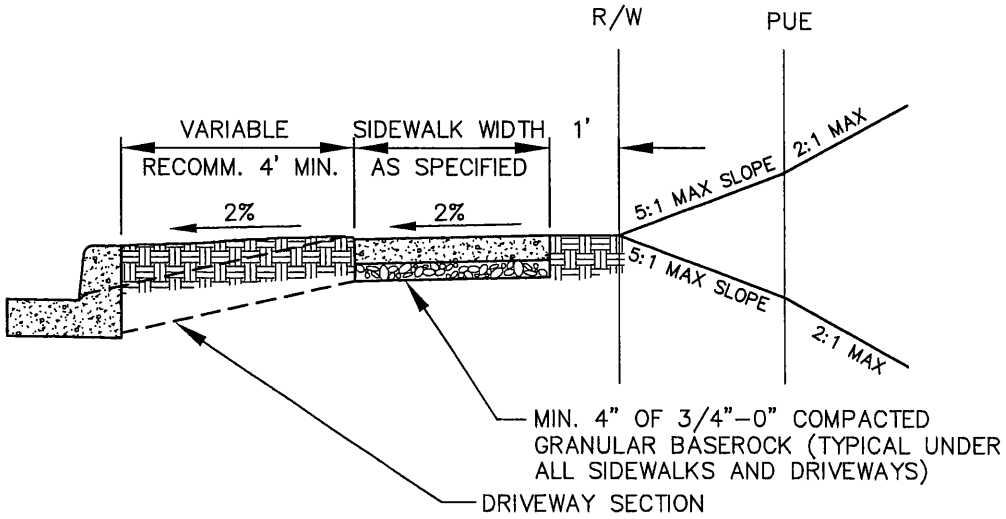

TYP. CROSS SECTION

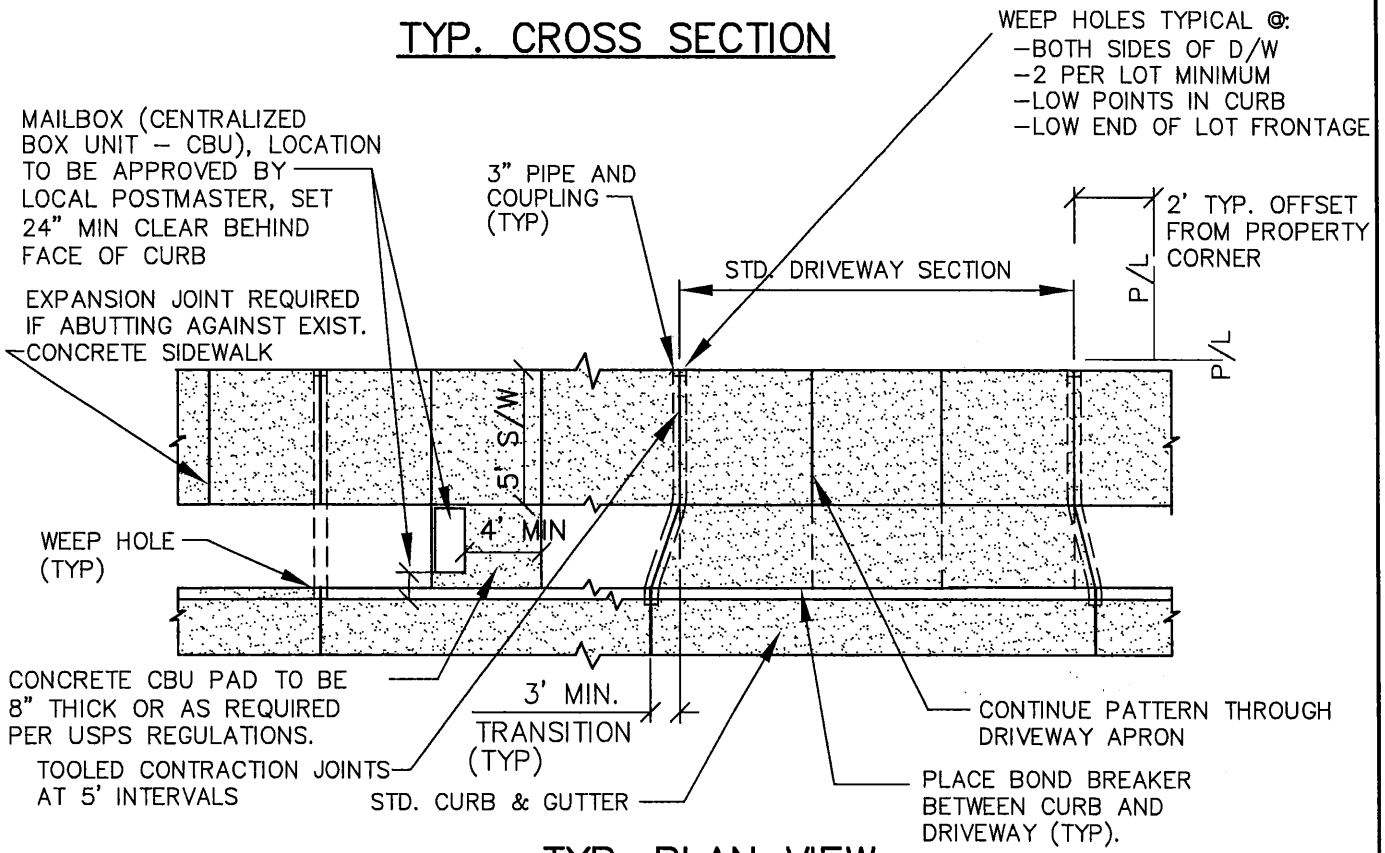

TYP. PLAN VIEW

NOTES:

1. CONCRETE DEPTH FOR STANDARD SIDEWALKS SHALL BE 4" MIN.
2. RESIDENTIAL DRIVEWAY SECTIONS INCLUDING SIDEWALKS THROUGH DRIVEWAYS SHALL BE 6" MIN. THICKNESS. COMMERCIAL D/W & ALLEY APPROACHES SHALL BE 8" MIN. THICKNESS.
3. SIDEWALKS 10' & WIDER SHALL HAVE A LONGITUDINAL CONTRACTION JOINT 5' ON CENTER.
4. PCC APRONS SHALL BE JOINTED TO MATCH SIDEWALK PATTERN.
5. CONCRETE SHALL BE 3300 PSI @ 28 DAYS.
6. ADA ACCESS TO CBU MAILBOXES SHALL CONFORM WITH SECTION 1111 OF THE OSSC (OREGON STRUCTURAL SPECIALTY CODE).

LAST REVISION DATE: SEPT 2013	COPYRIGHT 1996 WESTECH ENGINEERING, INC.
PROPERTY LINE SIDEWALKS AND DRIVEWAY APRONS (NTS)	
MT ANGEL, OR	DETAIL NO. 213

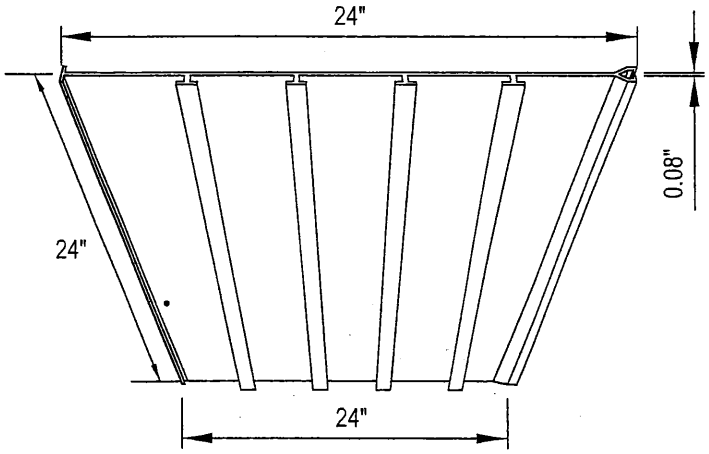

BARRIER PANEL
NTS (oblique view)

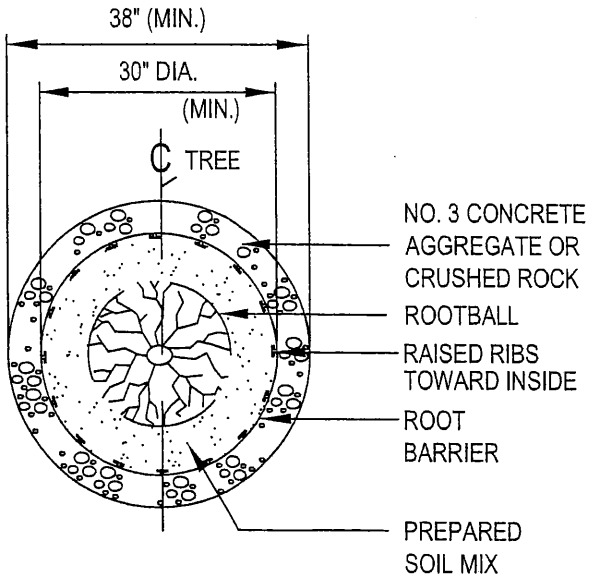

TYPE 1 (4 PANELS)
NTS

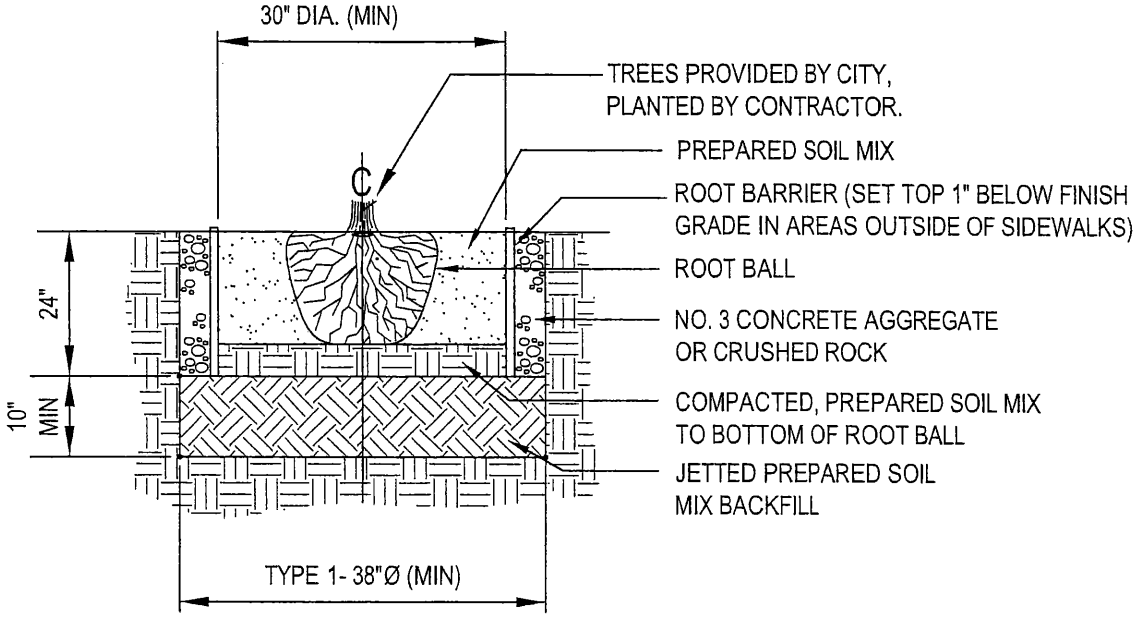

SECTION
NTS

NOTES:

1. BARRIER PANEL ASSEMBLY & INSTALLATION TO BE COMPLETED IN ACCORDANCE WITH MANUFACTURER'S SPECIFICATIONS & DRAWING/DETAIL NOTES, WHICHEVER IS MORE STRINGENT.
2. DO NOT SCALE DRAWINGS.
3. BARRIER PANELS TO BE NDS RP SERIES OR EQUAL.

LAST REVISION DATE: SEPT 2013	COPYRIGHT 1996 WESTECH ENGINEERING, INC.
24" DEEP, 30" Ø 4 PANEL ROOT BARRIER TREE WELLS (NTS)	
MT ANGEL, OR	DETAIL NO. 213B

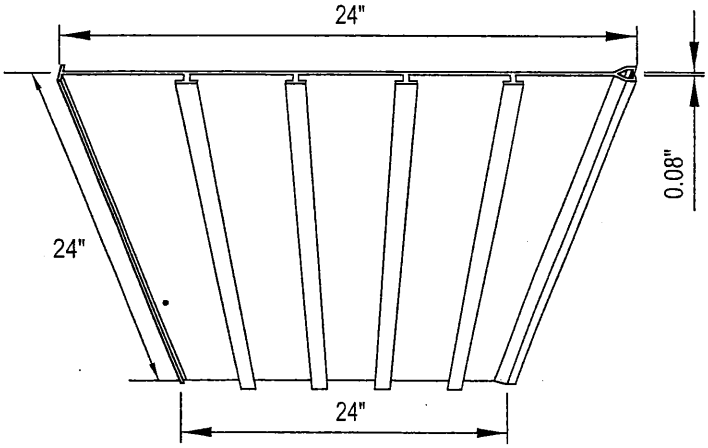

BARRIER PANEL
NTS (oblique view)

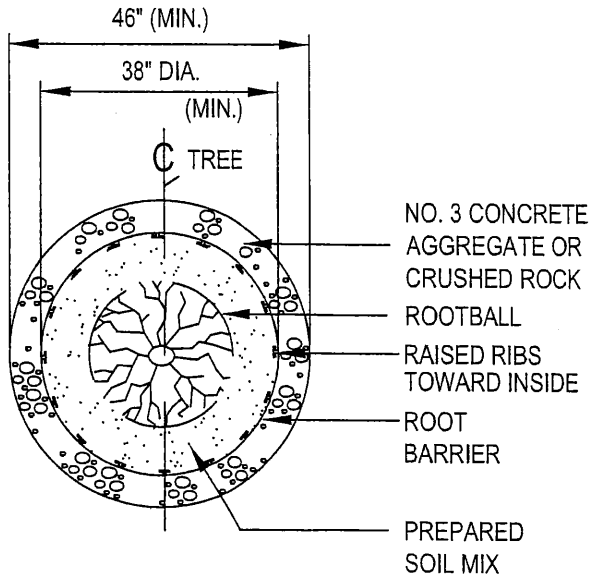

TYPE 2 (5 PANELS)
NTS

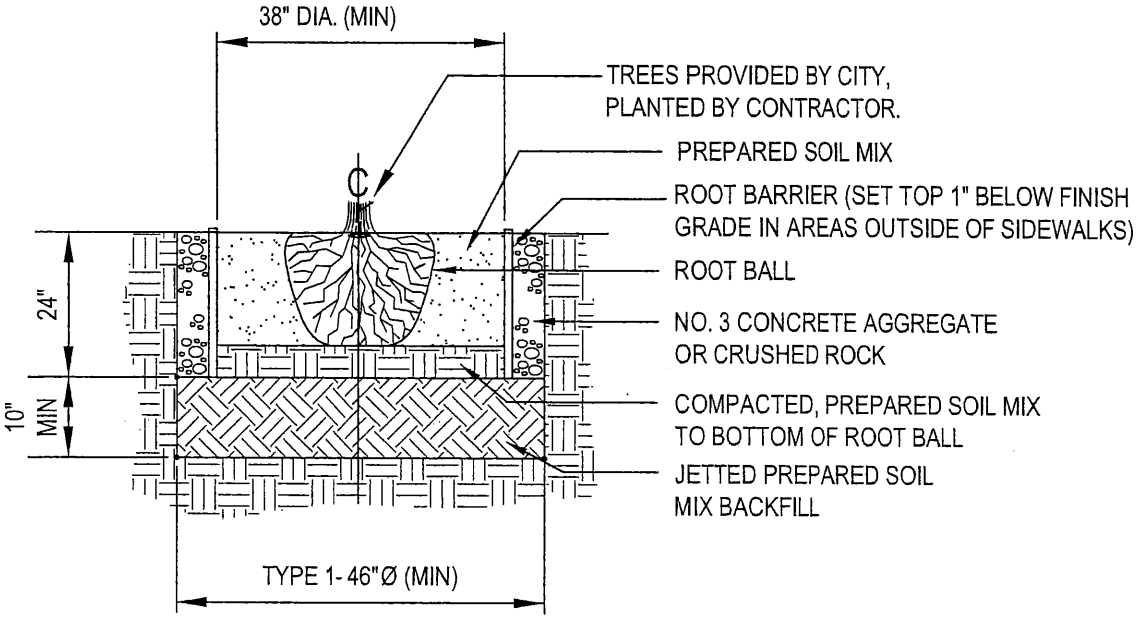

SECTION
NTS

NOTES:

1. BARRIER PANEL ASSEMBLY & INSTALLATION TO BE COMPLETED IN ACCORDANCE WITH MANUFACTURER'S SPECIFICATIONS & DRAWING/DETAIL NOTES, WHICHEVER IS MORE STRINGENT.
2. DO NOT SCALE DRAWINGS.
3. BARRIER PANELS TO BE NDS RP SERIES OR EQUAL.

LAST REVISION DATE: SEPT 2013	COPYRIGHT 1996 WESTECH ENGINEERING, INC.
24" DEEP, 38" Ø 5 PANEL ROOT BARRIER TREE WELLS (NTS)	
MT ANGEL, OR	DETAIL NO. 213C

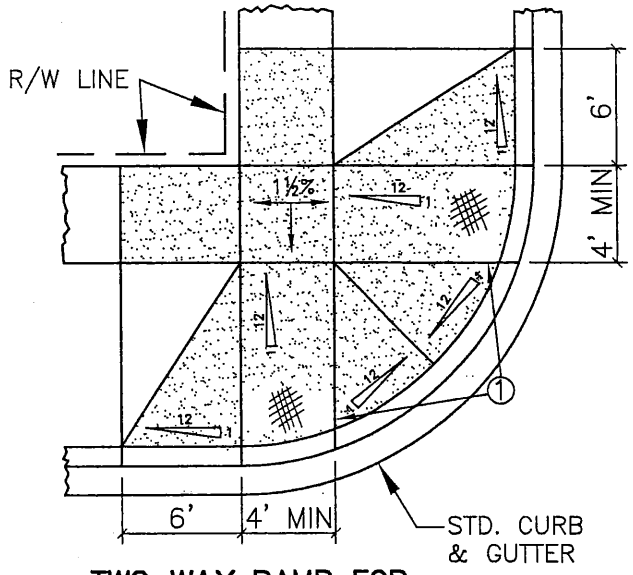

TWO WAY RAMP FOR PROPERTY LINE SIDEWALKS

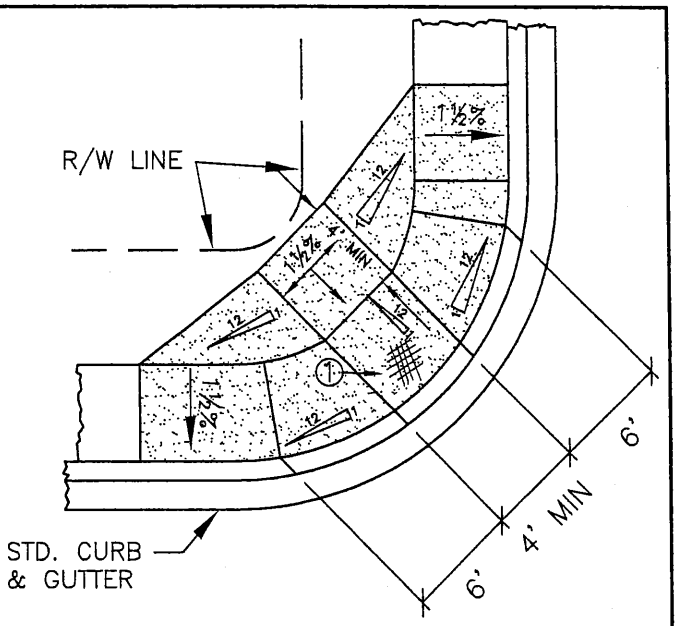

CENTER RAMP FOR CURB LINE SIDEWALK CURB GRADE >2%

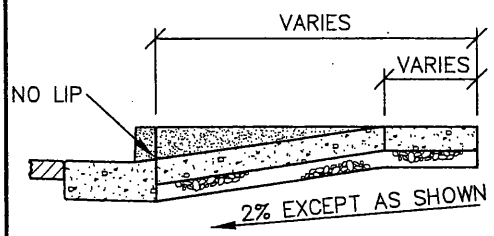

SECTION THRU RAMP (ALL VIEWS)

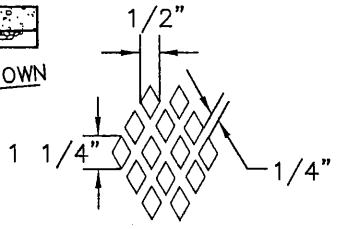

FIGURE A
RAMP TEXTURE DETAIL

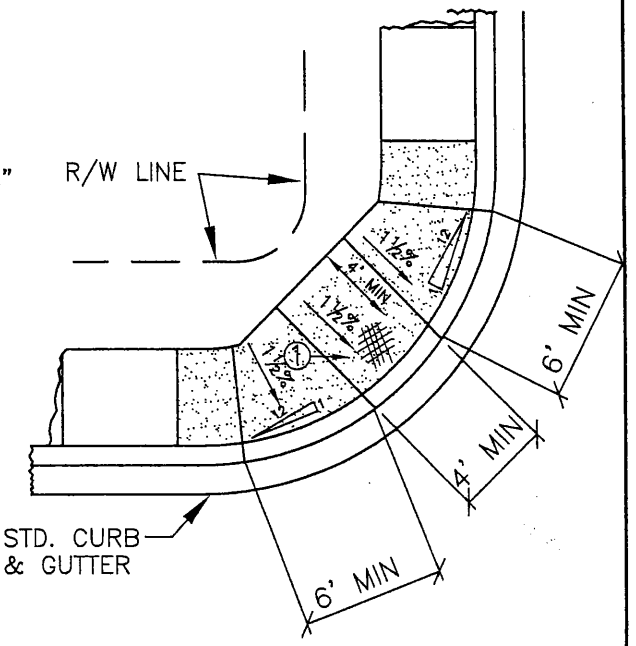

CENTER RAMP FOR CURB LINE SIDEWALK CURB GRADE 2% MAX

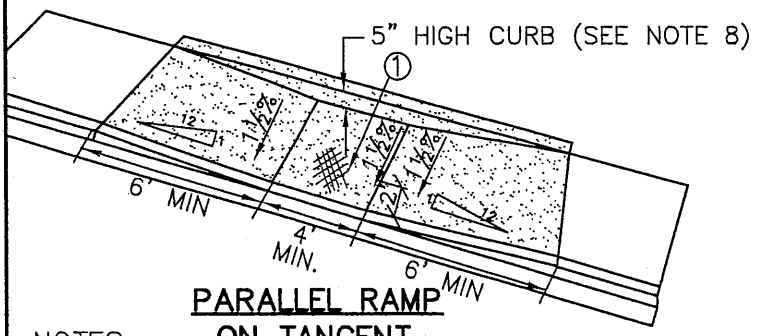

PARALLEL RAMP ON TANGENT

NOTES:

1. SEE FIGURE A FOR RAMP TEXTURE DETAIL.
2. SEE TYPICAL STREET SECTIONS FOR SIDEWALK WIDTH.
3. ALL RAMPS AND TRANSITIONS SHALL BE ADA COMPLIANT.
4. LANDINGS SHALL HAVE A MIN. WIDTH & DEPTH OF 4 FEET
5. THE 2% CROSS SLOPES (1:50) SHOWN ARE MEASURED FROM HORIZONTAL.
6. SHADED AREAS TO BE CONSTRUCTED W/STREET IMPROV.
7. DROP CURBS FOR HANDICAP RAMPS SHALL BE CONSTRUCTED WITH NO LIP AT THE GUTTER LINE.
8. PROVIDE TANGENT RAMPS ON LOW SIDE OF STREET WITH A 6-INCH WIDE CONCRETE CURB AS SHOWN UNLESS A CATCH BASIN IS PROVIDED AT UPHILL END OF RAMP.

LAST REVISION DATE: SEPT 2013	
HANDICAP RAMPS (NTS)	
MT ANGEL, OR	DETAIL NO. 214

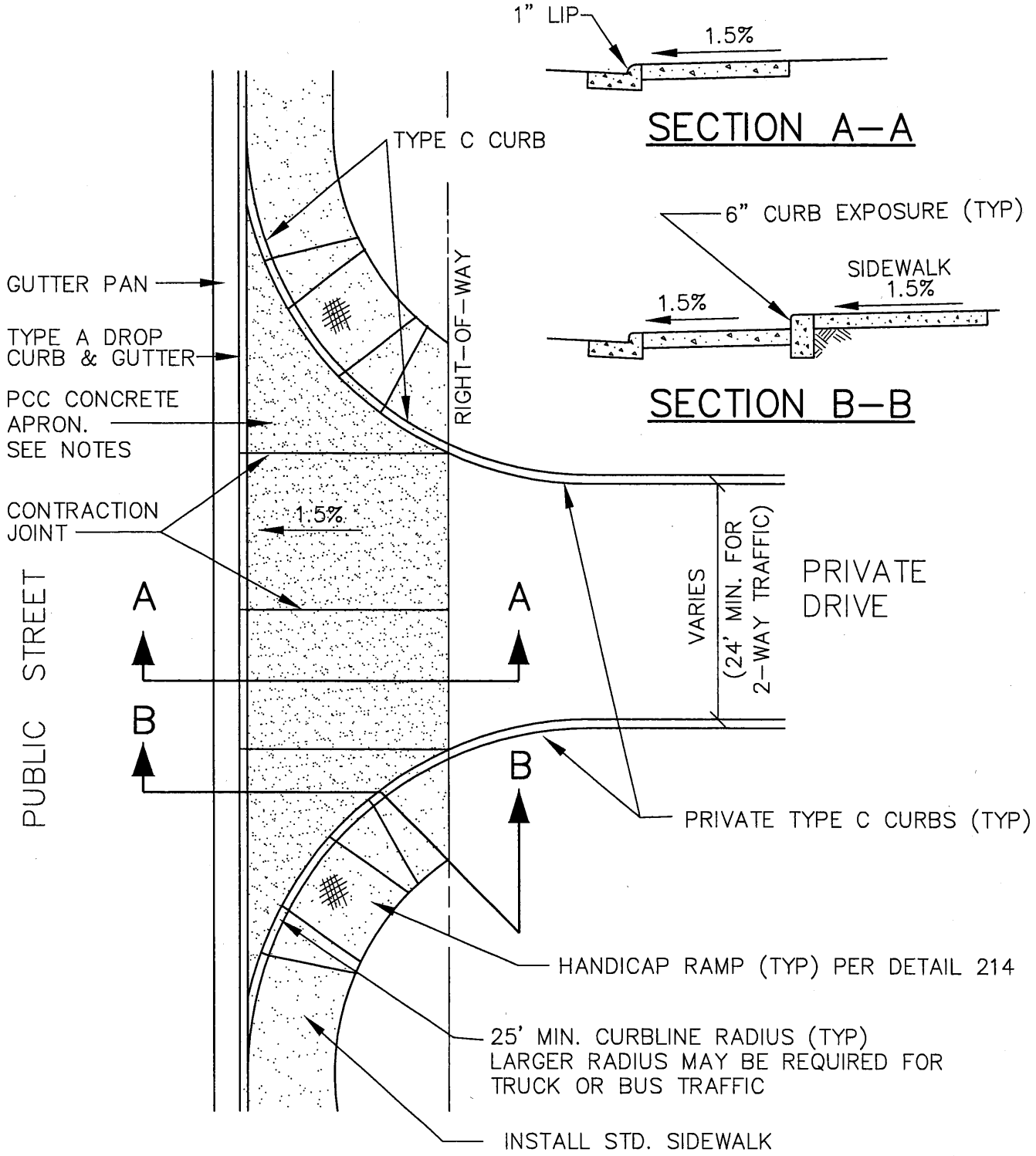

NOTES:

1. CONCRETE APRON TO HAVE A MIN. THICKNESS OF 8" CLASS 3300 PCC WITH #3 REBAR @ 12" O.C. EACH WAY, OR 6"X6" 10 GA. WELDED WIRE MESH, SET ON 3" DOBIES.

LAST REVISION DATE: NOV 2013	COPYRIGHT 1996 WESTECH ENGINEERING, INC.
COMMERCIAL DRIVEWAY APPROACH (NTS)	
MT ANGEL, OR	DETAIL NO. 216

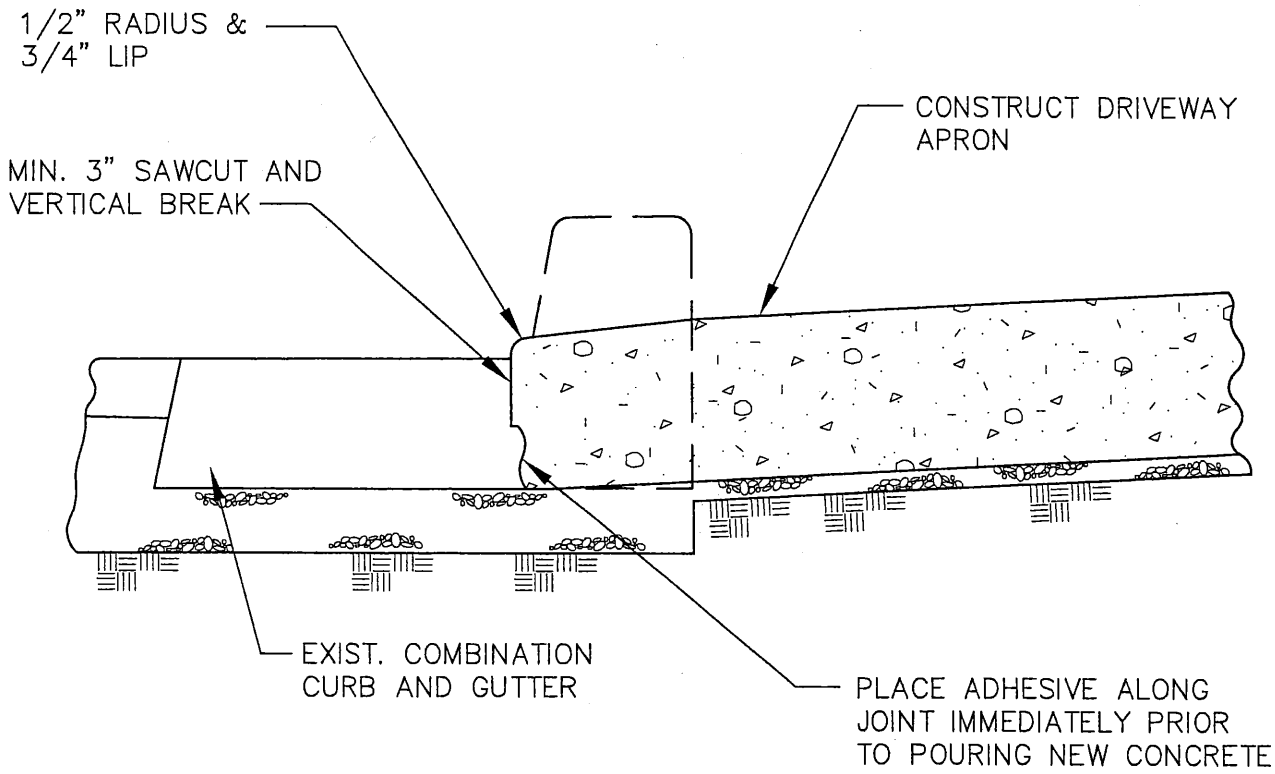

NOTES:

1. ONLY ALLOWED ON EXISTING PAVED STREETS.
2. SAWCUT THROUGH GUTTER PAN SHALL BE MADE AS CLOSE TO CURB FACE AS POSSIBLE.
3. COMPLETE CURB AND GUTTER SHALL NOT BE REMOVED UNLESS APPROVED BY THE CITY ENGINEER.
4. WHEN TYPE 'C' CURBS ARE REMOVED, A MINIMUM OF 2 FEET OF PAVEMENT FROM THE FACE OF CURB SHOULD BE REMOVED AND REPLACED UNLESS OTHERWISE APPROVED BY THE CITY.

LAST REVISION DATE: OCTOBER 1997	COPYRIGHT 1996 WESTECH ENGINEERING, INC.
CURB KNOCKOUT FOR NEW DRIVEWAYS ON EXISTING CURBED STREETS (NTS)	
MT ANGEL, OR	DETAIL NO. 217

FIRE CODE NOTE:
ALL FIRE LANES, TURNAROUNDS AND ASSOCIATED IMPROVEMENTS SHALL COMPLY WITH THE MOST CURRENT VERSION OF THE OREGON FIRE CODE (OFC).

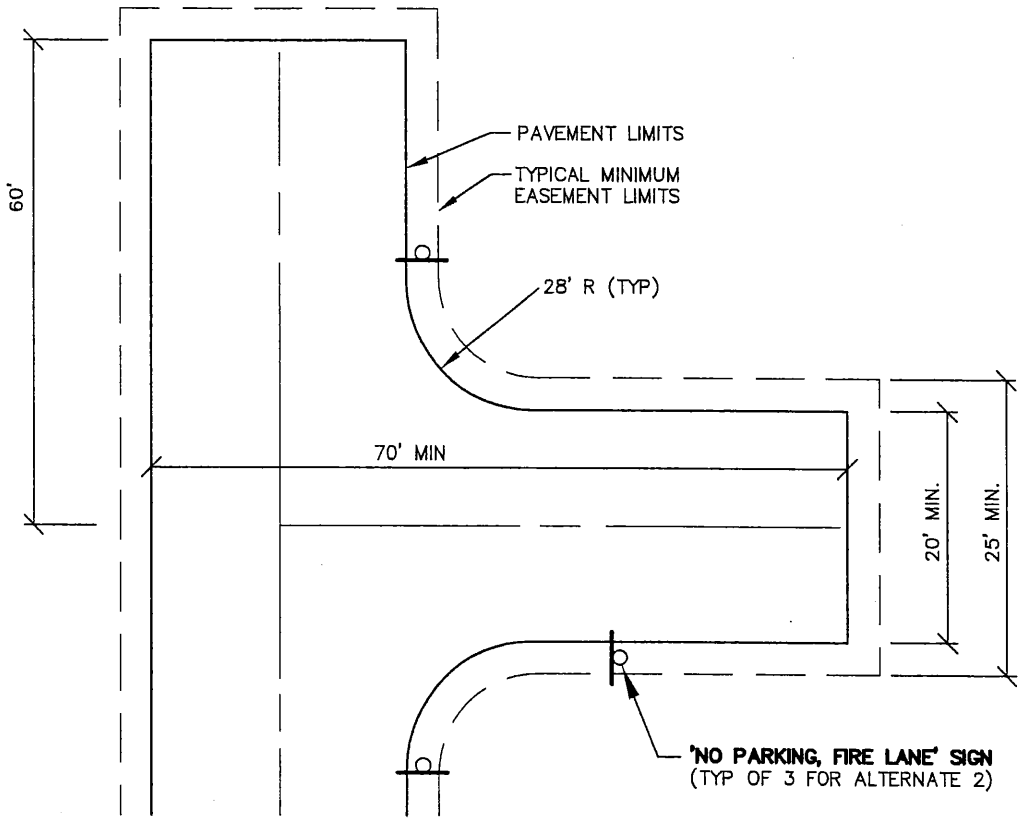

ALT 2

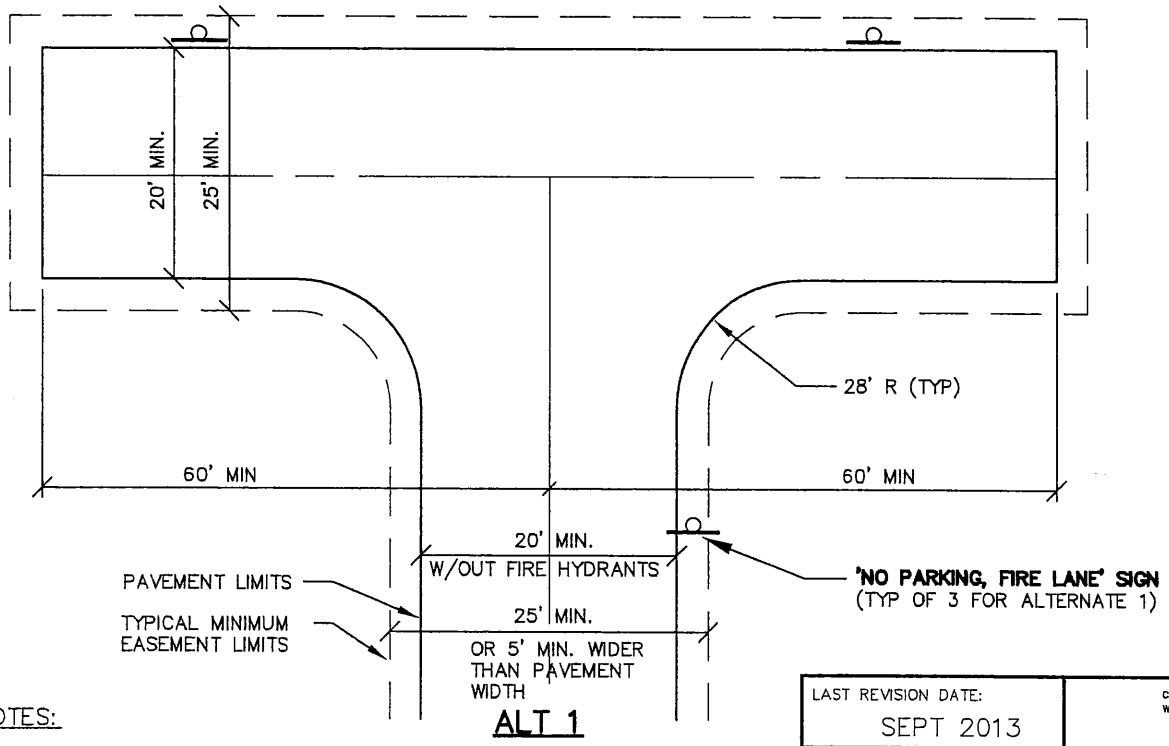

ALT 1

NOTES:

1. 'NO PARKING/FIRE LANE' SIGNS REQUIRED WITHIN LIMITS OF TURN-AROUND AS SHOWN, & AT TYPICAL 50 FOOT MAXIMUM INTERVALS ALONG LENGTH OF FIRE LANE OR PER OFC REQUIREMENTS.
2. THESE ARE TYPICAL MINIMUM DESIGNS AS REQUIRED BY THE 2010 OFC D103.4 & FIGURE D103.1. ALTERNATE DESIGNS SHALL MEET THE APPROVAL OF THE LOCAL FIRE MARSHALL.
3. PAVEMENT DIMENSIONS SHOWN REFERS TO TOTAL DRIVABLE WIDTH BETWEEN CURBS IF PRESENT.
4. MIN. 26' PAVEMENT WIDTH AT FIRE HYDRANTS (OFC D103.1).

LAST REVISION DATE: SEPT 2013	COPYRIGHT 1996 WESTECH ENGINEERING, INC.
HAMMERHEAD TURNAROUND (PRIVATE DRIVES ONLY) (NTS)	
MT ANGEL, OR	DETAIL NO. 220

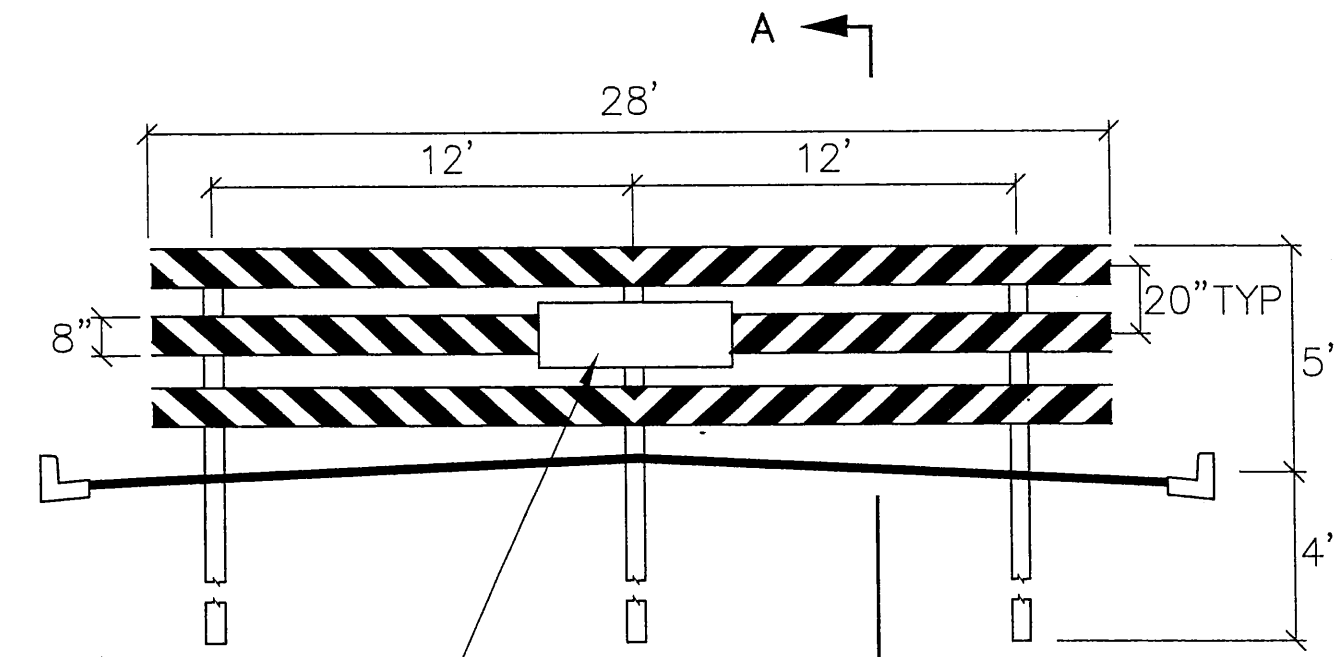

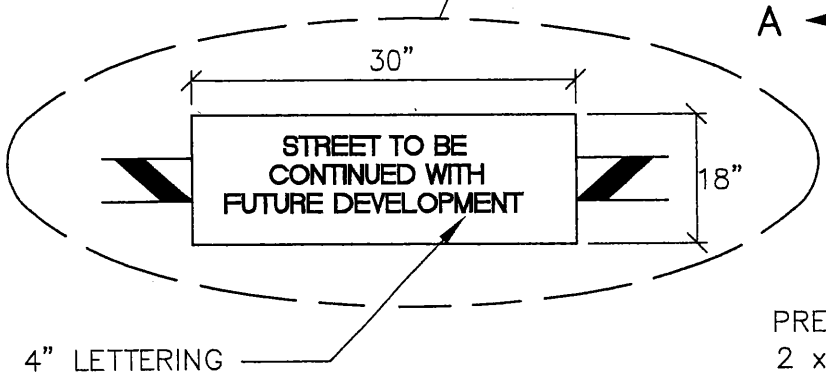

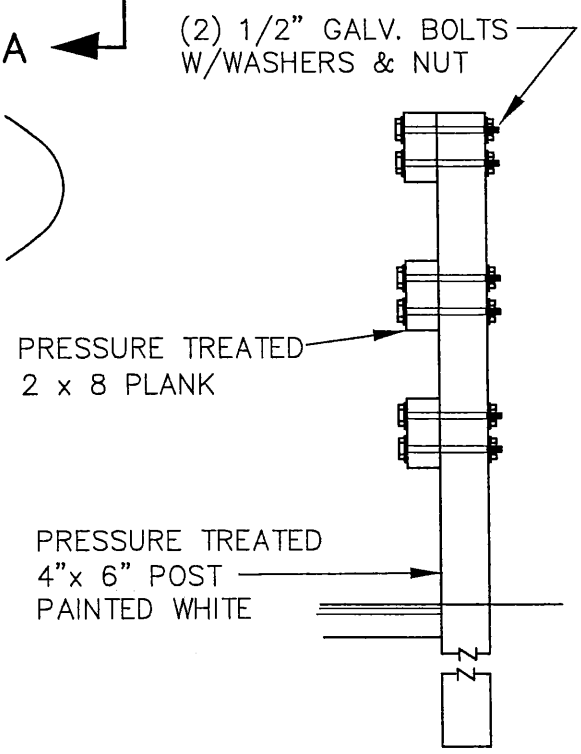

A – A

NOTES:

1. STRIPING SHALL BE ALTERNATING RED & WHITE STRIPES 6" WIDE & AT A 45° ANGLE.
2. STRIPING SHALL BE EITHER RETRO–REFLECTIVE TAPE OR PAINTED WITH A SEALED RETRO–REFLECTIVE SURFACE.
3. BARRICADE SHALL BE LOCATED WITHIN THE RESERVE STRIP, IF PRESENT.

LAST REVISION DATE: OCTOBER 1997	COPYRIGHT 1996 WESTECH ENGINEERING, INC.
STREET BARRICADE (STUB STREETS) (NTS)	
MT ANGEL, OR	DETAIL NO. 225

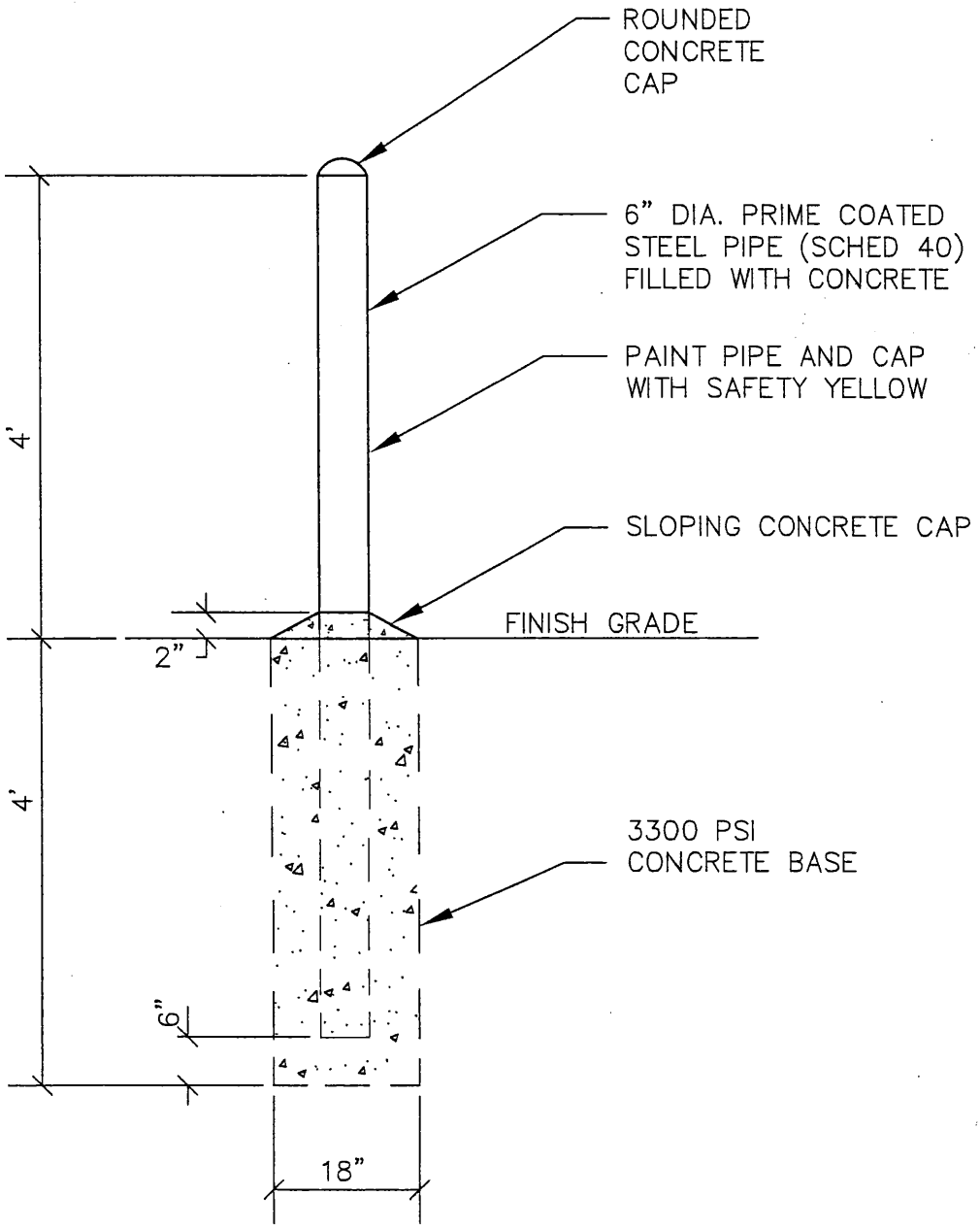

LAST REVISION DATE: OCTOBER 1997	COPYRIGHT 1996 WESTECH ENGINEERING, INC.
6-INCH BOLLARD (GUARD POST) (NTS)	
MT ANGEL, OR	DETAIL NO. 226

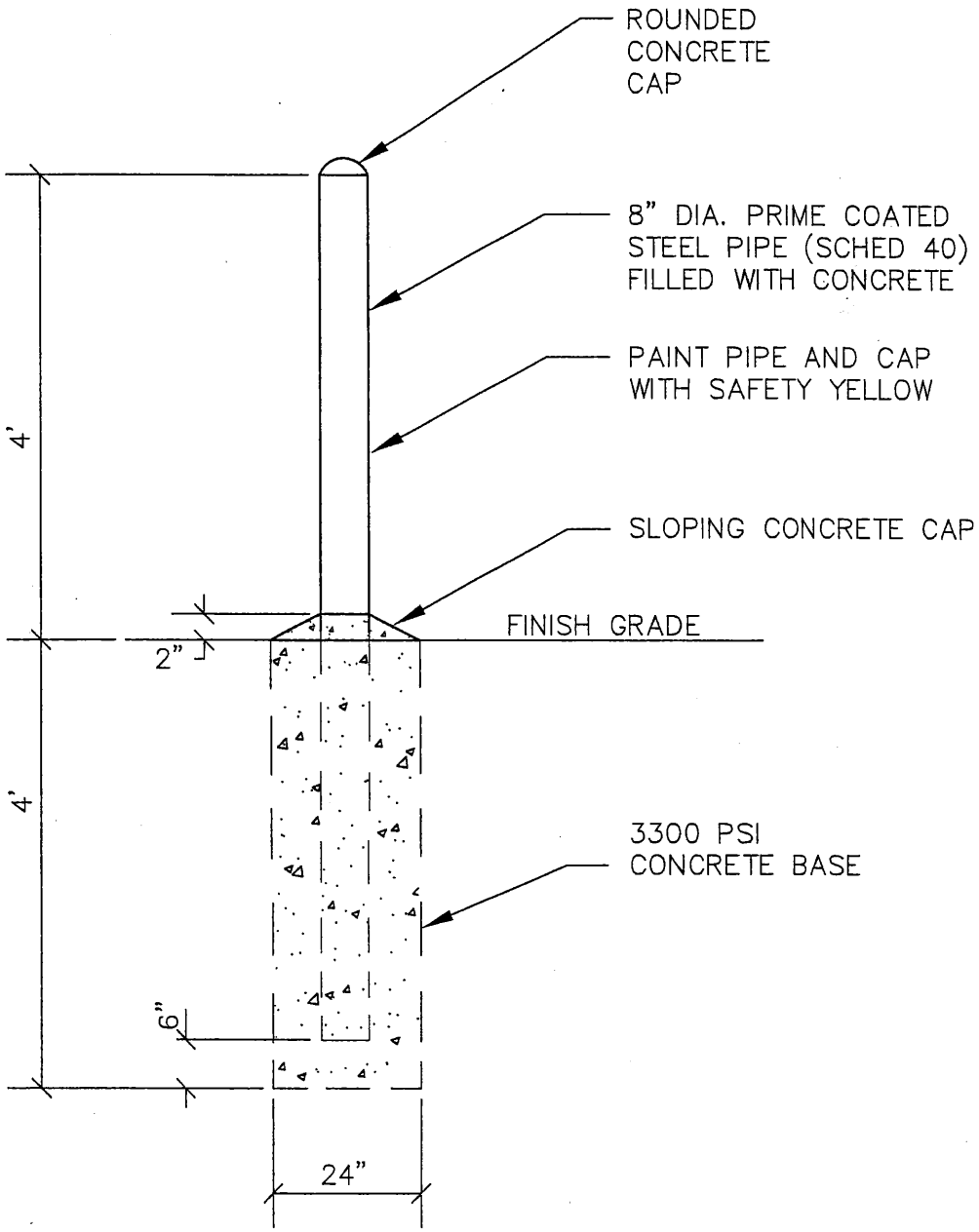

LAST REVISION DATE: OCTOBER 1997	COPYRIGHT 1996 WESTECH ENGINEERING, INC.
8-INCH BOLLARD (GUARD POST) (NTS)	
MT ANGEL, OR	DETAIL NO. 227

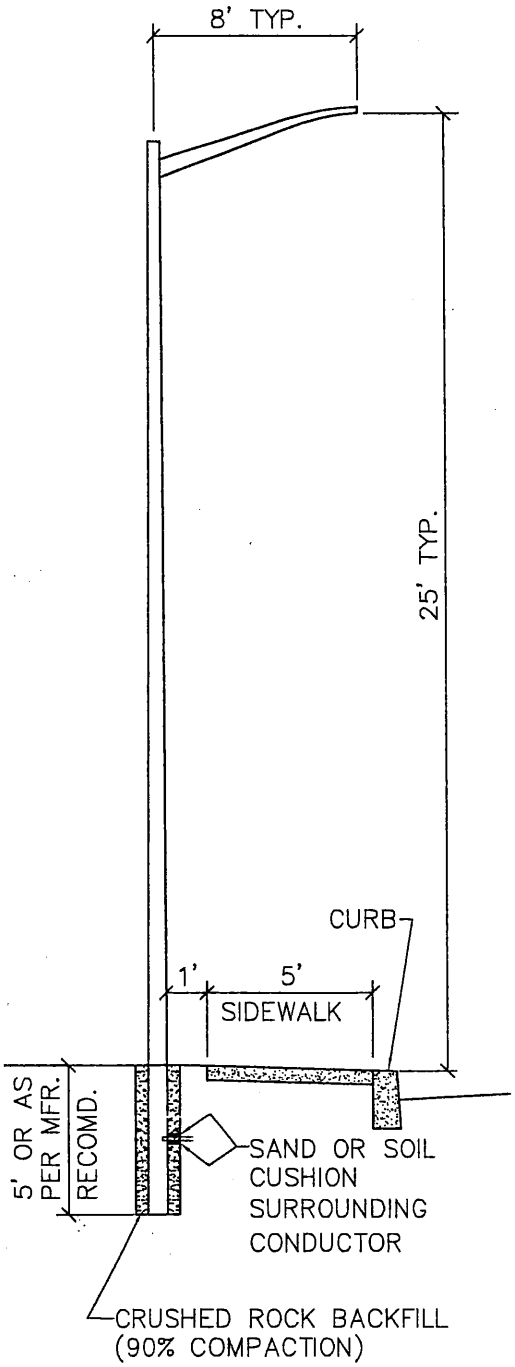

TYPICAL LAMP POST
CROSS SECTION TYPE ONE

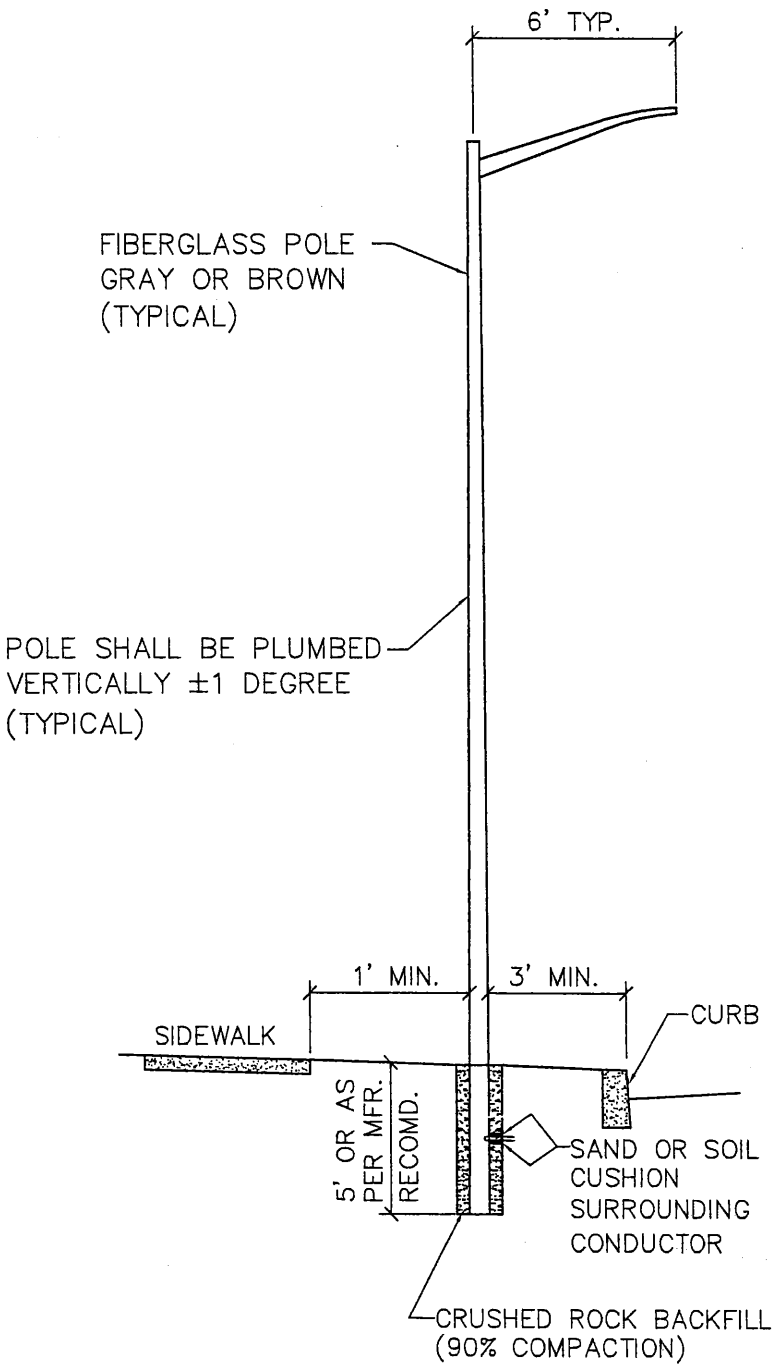

TYPICAL LAMP POST
CROSS SECTION TYPE TWO

NOTES:

1. CONTRACTOR TO COORDINATE W/LOCAL POWER COMPANY FOR MATERIALS AND WORKMANSHIP REQUIREMENTS.
2. UNLESS OTHERWISE SHOWN ON DRAWINGS, STANDARD FIXTURE IS 100 WATT FLAT LENS COBRAHEAD.

NOTE: PER ORS 92.044(7), STREET LIGHT MUST BE SET 1' MINIMUM CLEAR FROM ANY SURVEY MONUMENT

LAST REVISION DATE: SEPT 2013	
TYPICAL STREET LAMP POST (NTS)	
MT ANGEL, OR	DETAIL NO. 230

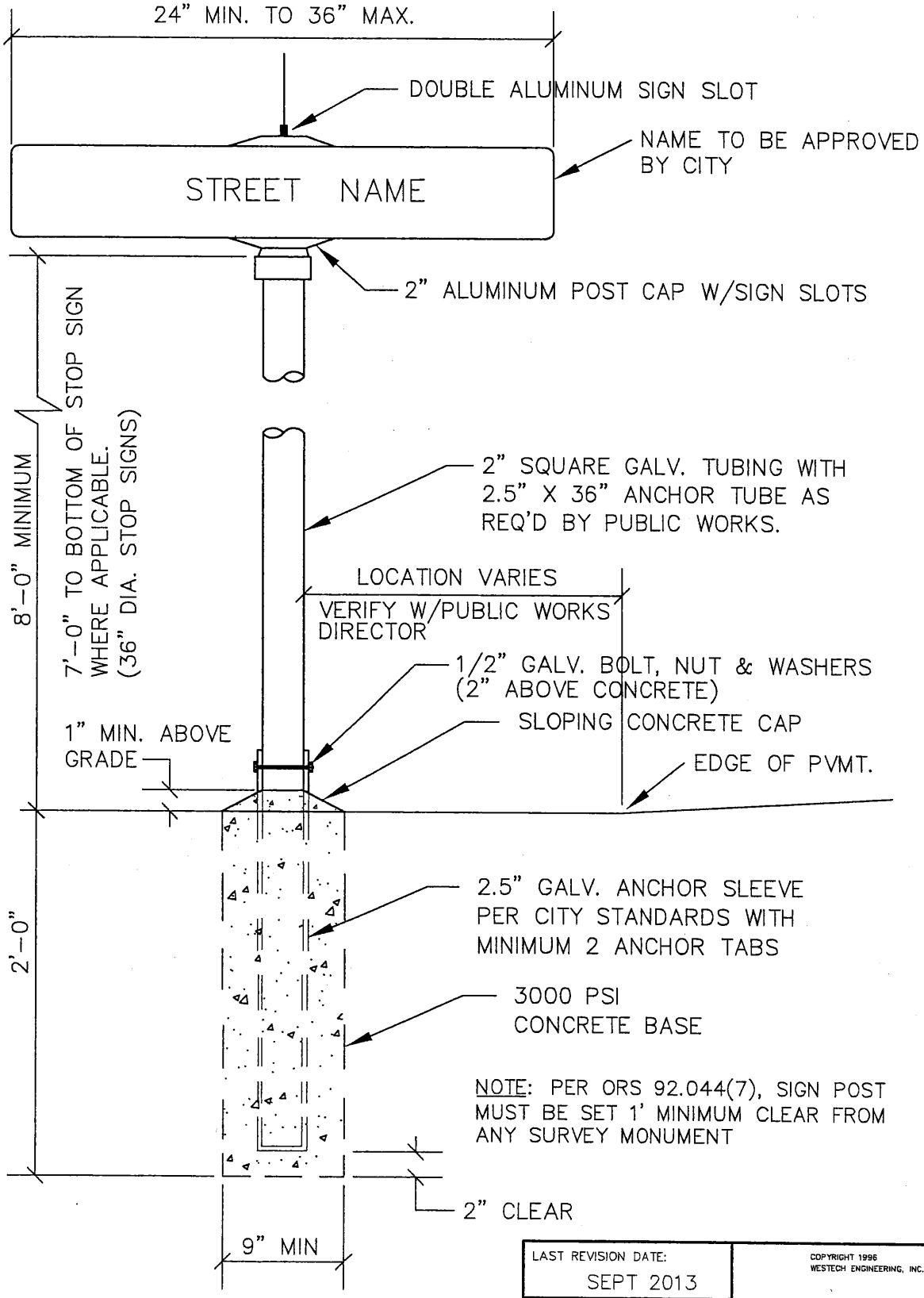

NOTES:

1. ALL NEWLY PLATTED STREETS TO BE SIGNED IN ACCORDANCE WITH CITY STANDARDS.
2. SIGN PANELS TO CONFORM TO SECTION 00940 OF OSHD SPECIFICATIONS AS TO MATERIALS.
3. ALL SIGNS SHALL BE IN CONFORMANCE WITH THE STATE OF OREGON UNIFORM TRAFFIC MANUAL.

LAST REVISION DATE: SEPT 2013	COPYRIGHT 1996 WESTECH ENGINEERING, INC.
SIGN POST FOR STREET SIGNS, STOP SIGNS & TRAFFIC CONTROL SIGNS (NTS)	
MT ANGEL, OR	DETAIL NO. 231

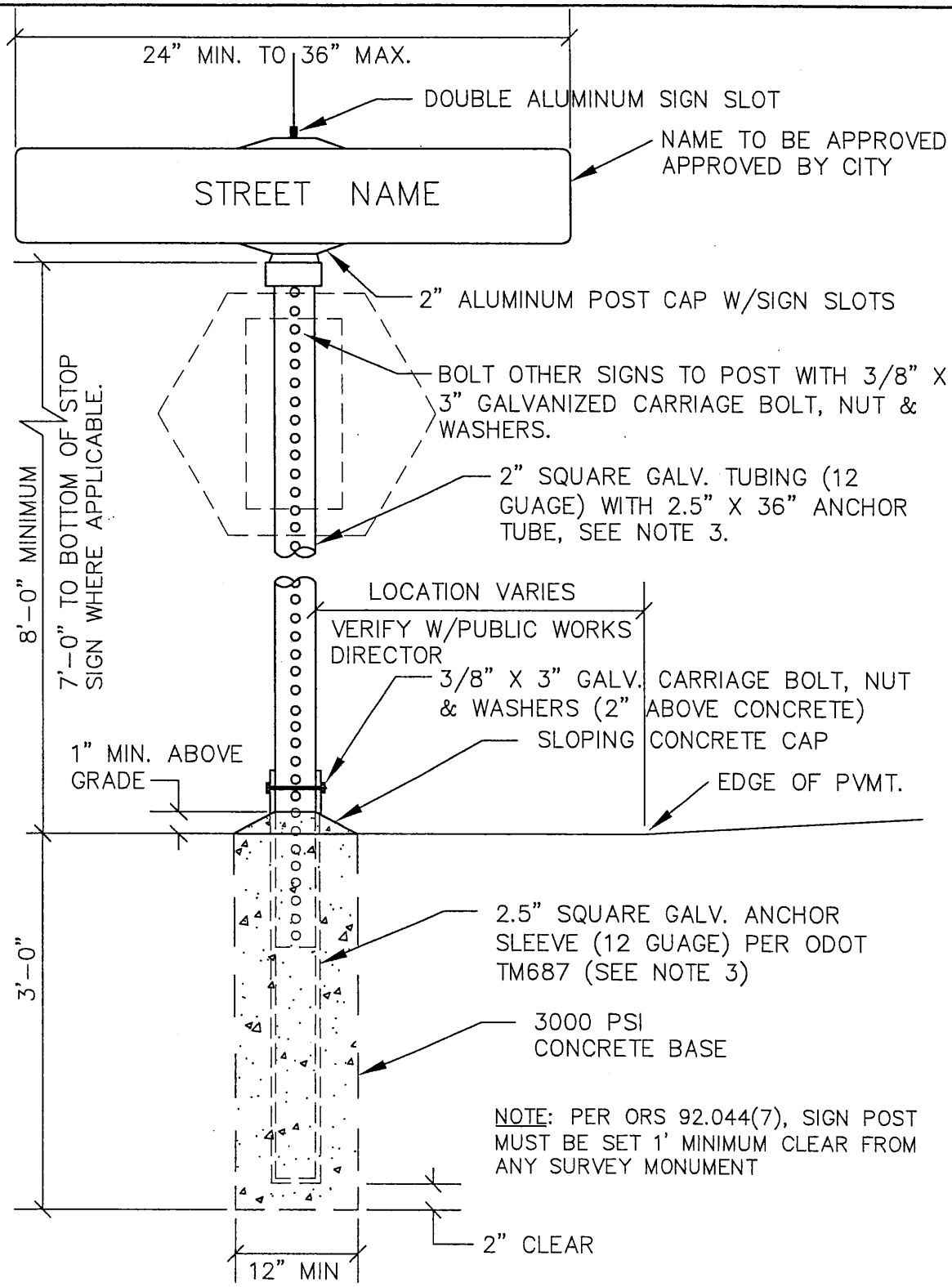

NOTES:

1. STREETS INTERSECTING ODOT RIGHT-OF-WAY TO BE SIGNED PER WITH ODOT STANDARDS.
2. SIGN PANEL MATERIALS TO CONFORM TO SECTION 00940 OF OSHD SPECIFICATIONS, AND ALL SIGNS SHALL CONFORM WITH OREGON MUTCD MANUAL.
3. SIGN POSTS & SLEEVES TO HAVE 7/16" DIAMETER HOLES ON 1" HOLE CENTERS.

LAST REVISION DATE: SEPT 2013	
SIGN POST WITH TELESPAR BASE & ANCHOR (REQUIRED IN ODOT R.O.W) (NTS)	
MT ANGEL, OR	DETAIL NO. 232

OFF–STREET PARKING DIMENSIONS

STALL WIDTH DIMENSIONS MAY BE DISTRIBUTED AS FOLLOWS:
60% STANDARD SPACES, 40% MAXIMUM COMPACT SPACES.
ALL COMPACT SPACES SHALL BE PERMANENTLY LABLED.

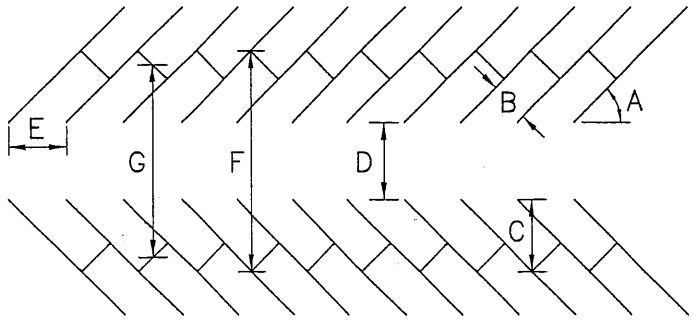

A– PARKING ANGLE

B– STALL WIDTH

C– STALL TO CURB DEPTH

D– AISLE WIDTH BETWEEN STALL LINES

E– STALL WIDTH PARALLEL TO AISLE

F– MODULE WIDTH (FRONT OF STALL TO FRONT OF STALL)

G– MODULE WIDTH (FRONT OF STALL TO FRONT OF STALL AT BUMPER MIDPOINT

OFF–STREET PARKING MATRIX

MINIMUM PARKING SPACE AND AISLE DIMENSIONS (FT)
ONE WAY TRAFFIC FLOW

	COMPACT (8.5' x 16')						STANDARD (9' x 19')					
A	B	C	D	E	F	G	B	C	D	E	F	G
0°	8.5	8.5	12.0	19.0	28.0	–	9.0	9.0	12.0	22.0	28.0	–
30°	8.5	15.4	12.0	17.0	41.7	34.4	9.0	17.3	12.0	18.0	45.6	37.8
45°	8.5	17.3	13.0	12.0	47.6	41.6	9.0	19.8	13.0	12.7	52.6	46.2
60°	8.5	18.1	18.0	9.8	54.2	50.0	9.0	21.0	18.0	10.4	60.0	55.7
70°	8.5	17.9	19.0	9.0	54.9	52.0	9.0	21.0	19.0	9.6	61.0	57.8
90°	8.5	16.0	24.0	8.5	56.0	56.0	9.0	19.0	24.0	9.0	62.0	62.0

NOTE:
WHERE DRIVE AISLE "D" IS A FIRE LANE, WIDTHS SHALL CONFORM WITH THE OREGON FIRE CODE MINIMUMS OF 20 FEET IN ALL CASES (26 FOOT MINIMUM ADJACENT TO FIRE HYDRANTS), PER OFC 503.2.1 & D103.1.

LAST REVISION DATE: SEPT 2013

COPYRIGHT 1996 WESTECH ENGINEERING, INC.

OFFSTREET PARKING DIMENSIONS
ONE WAY TRAFFIC FLOW
(NTS)

MT ANGEL, OR

DETAIL NO. 235

OFF-STREET PARKING DIMENSIONS

STALL WIDTH DIMENSIONS MAY BE DISTRIBUTED AS FOLLOWS:
60% STANDARD SPACES, 40% MAXIMUM COMPACT SPACES.
ALL COMPACT SPACES SHALL BE PERMANENTLY LABLED.

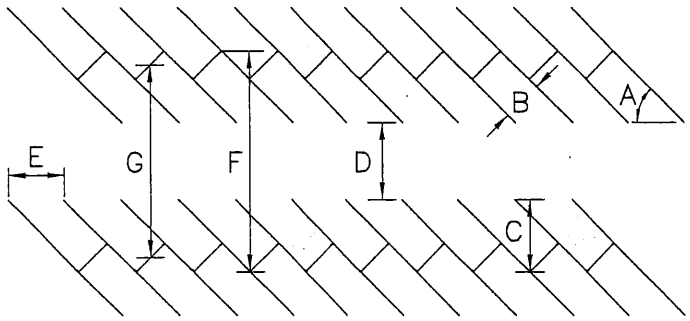

A– PARKING ANGLE

B– STALL WIDTH

C– STALL TO CURB DEPTH

D– AISLE WIDTH BETWEEN STALL LINES

E– STALL WIDTH PARALLEL TO AISLE

F– MODULE WIDTH (FRONT OF STALL TO FRONT OF STALL)

G– MODULE WIDTH (FRONT OF STALL TO FRONT OF STALL AT BUMPER MIDPOINT

OFF-STREET PARKING MATRIX

MINIMUM PARKING SPACE AND AISLE DIMENSIONS (FT)
TWO WAY TRAFFIC FLOW

	COMPACT (8.5' x 16')						STANDARD (9' x 19')					
A	B	C	D	E	F	G	B	C	D	E	F	G
0°	8.5	8.5	24.0	19.0	28.0	–	9.0	9.0	24.0	22.0	28.0	–
30°	8.5	15.4	24.0	17.0	41.7	34.4	9.0	17.3	24.0	18.0	45.6	37.8
45°	8.5	17.3	24.0	12.0	47.6	41.6	9.0	19.8	24.0	12.7	52.6	46.2
60°	8.5	18.1	24.0	9.8	54.2	50.0	9.0	21.0	24.0	10.4	60.0	55.7
70°	8.5	17.9	24.0	9.0	54.9	52.0	9.0	21.0	24.0	9.6	61.0	57.8
90°	8.5	16.0	24.0	8.5	56.0	56.0	9.0	19.0	24.0	9.0	62.0	62.0

NOTE:
WHERE DRIVE AISLE "D" IS A FIRE LANE, WIDTHS SHALL CONFORM WITH THE OREGON FIRE CODE MINIMUMS OF 20 FEET IN ALL CASES (26 FOOT MINIMUM ADJACENT TO FIRE HYDRANTS), PER OFC 503.2.1 & D103.1.

LAST REVISION DATE: SEPT 2013

COPYRIGHT 1996
WESTECH ENGINEERING, INC.

OFFSTREET PARKING DIMENSIONS
TWO WAY TRAFFIC FLOW
(NTS)

MT ANGEL, OR

DETAIL NO. 236

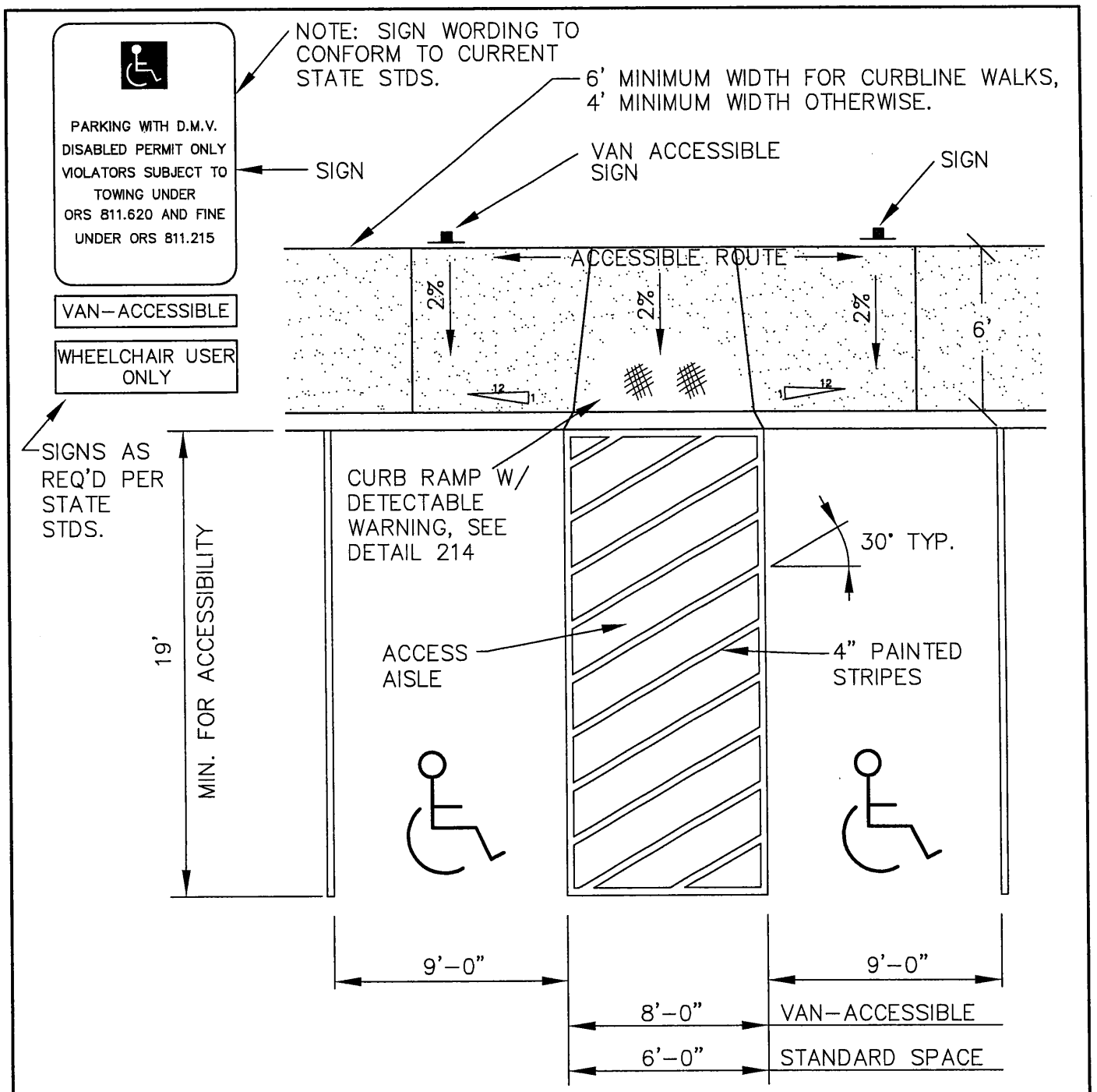

DOUBLE ACCESSIBLE PARKING SPACE

NOTES:

1. ONE ACCESSIBLE PARKING SPACE MUST BE DESIGNATED "VAN-ACCESSIBLE", THE OTHER SPACE CAN BE EITHER "VAN-ACCESSIBLE" OR STANDARD PARKING SPACE.
2. VAN-ACCESSIBLE OR WHEELCHAIR ONLY SPACES SHALL HAVE AN ADDITIONAL SIGN MOUNTED BELOW THE STANDARD PARKING SPACE PARKING SIGN.
3. VAN-ACCESSIBLE SPACE CAN BE USED BY ANY VEHICLE WITH A DMV DISABLED PERMIT.
4. MAXIMUM 2% CROSS SLOPE ALLOWED IN PARKING SPACE OR ACCESS AISLE.
5. POST MOUNTED SIGNS SHALL HAVE 7' (±3") CLEARANCE FROM SIGN BOTTOM TO GROUND.

LAST REVISION DATE: SEPT 2013	
DOUBLE ACCESSIBLE PARKING SPACE (NTS)	
MT ANGEL, OR	DETAIL NO. 237

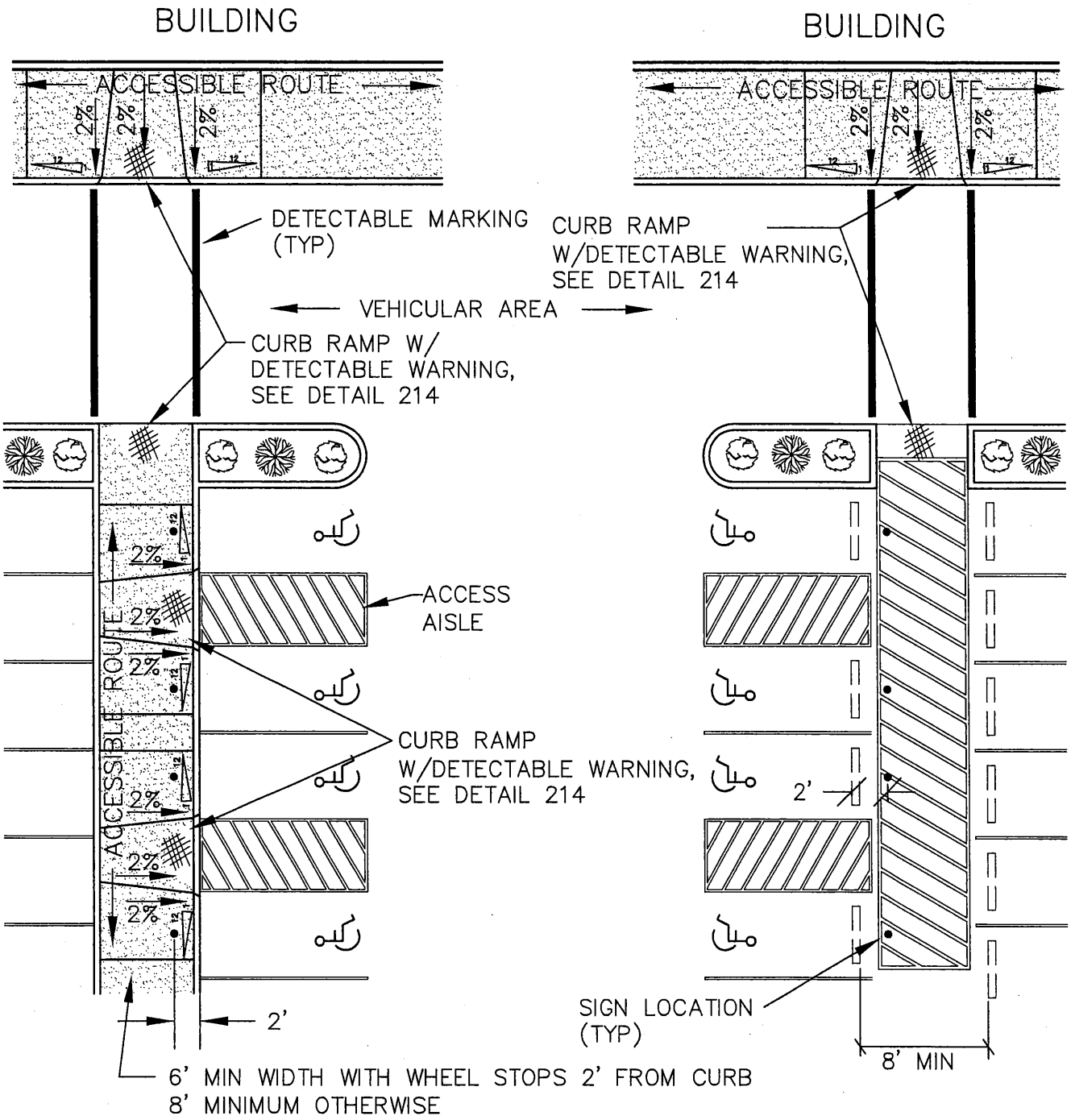

ACCESSIBLE PARKING PLAN (1)

ACCESSIBLE PARKING PLAN (2)

NOTES:

1. SEE DETAIL 237 FOR ACCESSIBLE PARKING SPACE LAYOUT.
2. POST MOUNTED SIGNS SHALL HAVE 7' (±3") CLEARANCE FROM SIGN BOTTOM TO GROUND.

LAST REVISION DATE: SEPT 2013	
ACCESSIBLE ROUTES AND CROSSINGS IN VEHICULAR AREAS (NTS)	
MT ANGEL, OR	DETAIL NO. 238

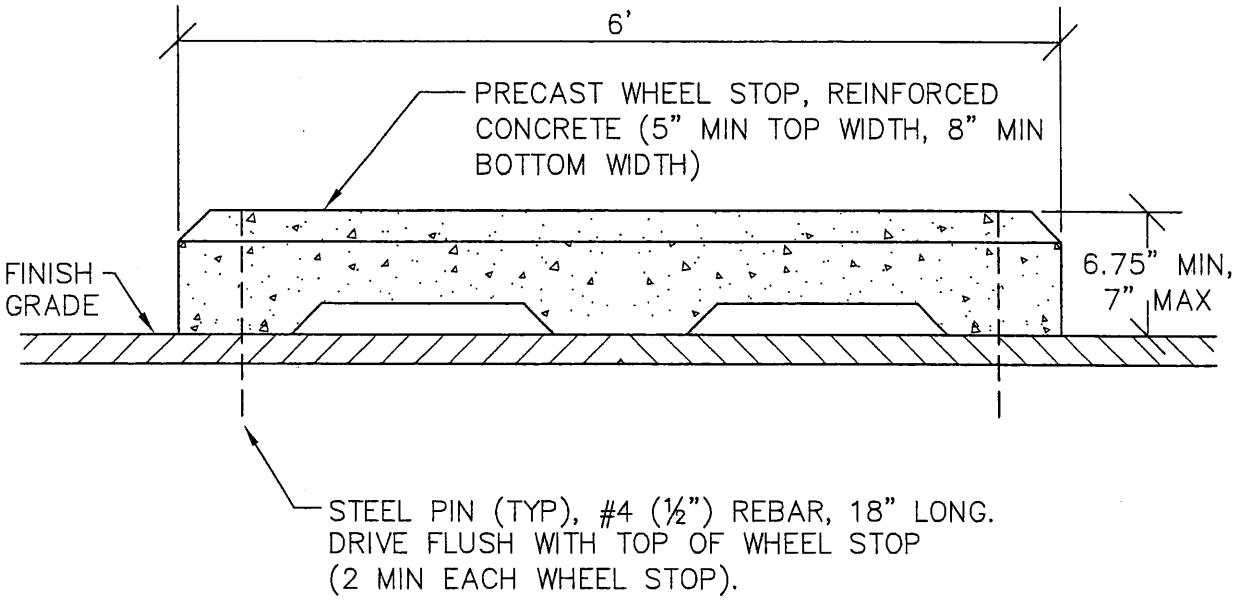

SECTION

NTS

NOTES:

1. SEE DRAWINGS FOR LOCATION & NUMBER OF WHEEL STOPS, INCLUDING DIMENSION FROM CURB, EDGE OF PAVEMENT OR BUILDING AS APPLICABLE.
2. UNLESS OTHERWISE SPECIFIED OR SHOWN ON SITE PLAN, SET WHEEL STOPS 2 FEET FROM FACE OF CURB OR EDGE OF PAVEMENT, MEASURED FROM THE FACE OF THE WHEEL STOP (VEHICLE SIDE) TO FACE OF CURB (OR EDGE OF PAVEMENT). SET BACK FROM PROPERTY LINES PER CITY STANDARDS (3' MIN). MIN SETBACK FROM BUILDINGS AS SHOWN ON DWGS.
3. FOR USE ON HEAD-IN PARKING WITHOUT FULL HEIGHT CURBS, OR WHERE A SIDEWALK ALONG HEAD-IN PARKING IS LESS THAN 6 FEET WIDE.

LAST REVISION DATE: SEPT 2013	JO #
PRECAST WHEELSTOP DETAIL (NTS)	
MT ANGEL, OR	DETAIL NO. 239

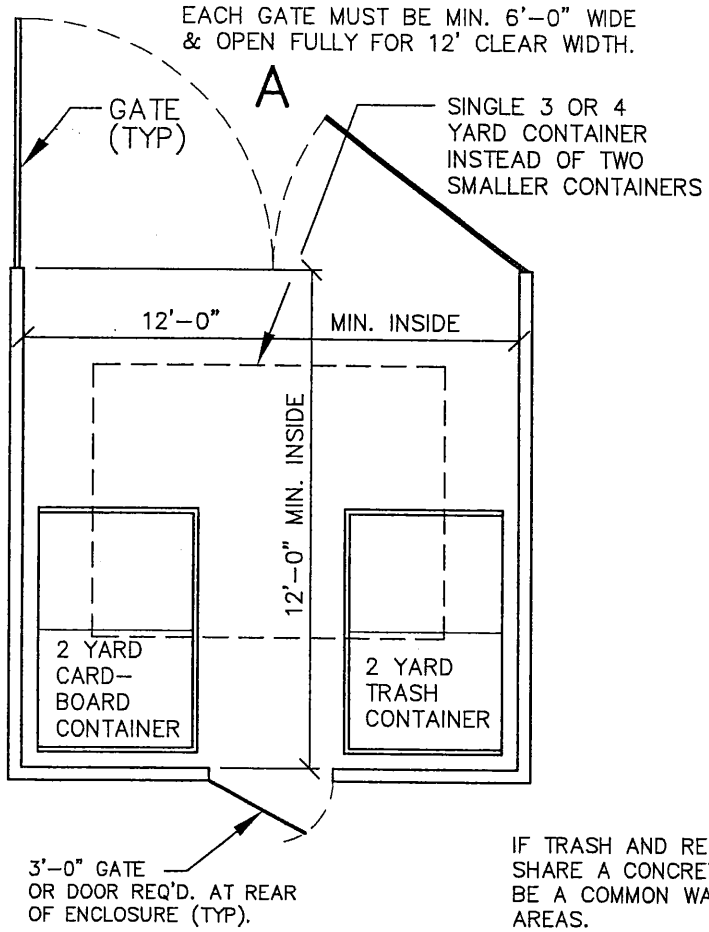

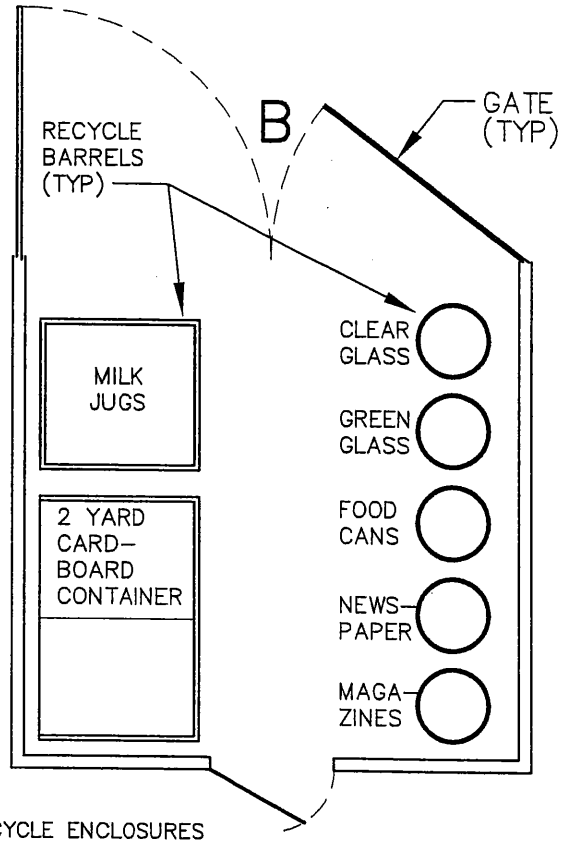

IF TRASH AND RECYCLE ENCLOSURES SHARE A CONCRETE PAD, THERE MUST BE A COMMON WALL SEPARATING THE AREAS.

TRASH ENCLOSURE

RECYCLE ENCLOSURE

NOTES:

1. GATES:
   (a) ALL GATES MUST ATTACH AT THE END OF OF THE WALLS TO PROVIDE A MINIMUM OF 12' CLEAR WORKING SPACE WHEN OPEN.
   (b) TO SERVICE THE ENCLOSURE, THE GATES MUST BE ABLE TO BE PINNED IN MUST BE ABLE TO BE PINNED IN THE FULL OPEN POSITION.
   (c) GATES MUST OPEN FROM OUTSIDE THE ENCLOSURE.
2. FOR 5 OR 6 YARD CONTAINERS THE ENCLOSURE DEPTH MUST BE 15'.
3. WHERE REQ'D. (I.E. RESTAURANTS), GREASE BARRELS MUST BE SEPARATE FROM TRASH AND RECYCLING ENCLOSURES.
4. ROOFS OR OVERHANGS SHALL HAVE 15' OF OVERHEAD CLEARANCE.
5. IF RECYCLING IS NOT INCLUDED, AREA (A) CAN PROVIDE SERVICE FOR TRASH AND CARDBOARD FOR CONTAINER SIZES OF 1 TO 2 YARDS. IF A 3 YARD OR LARGER TRASH CONTAINER IS NEEDED, AN ADDITIONAL 12' X 12' SPACE WILL BE NECESSARY FOR CARDBOARD CONTAINER SERVICE.
6. CONCRETE PADS REQUIRED FOR ALL ENCLOSURES. WALL, GATE & DOORS PER CITY STANDARDS.
7. A 1 YD. CONTAINER WILL HOLD APPROXIMATELY THE SAME AS 6 TRASH CANS (32 GAL SIZE). USE 6 TIMES THE CONTAINER SIZE IN YARDS TO ESTIMATE A CONTAINER CAPACITY. FOR EXAMPLE, A 3 YD. CONTAINER WILL HOLD APPROX. THE SAME AMOUNT AS 18 TRASH CANS (32 GAL SIZE).

LAST REVISION DATE: SEPT 1996	
TRASH AND RECYCLING ENCLOSURE (NTS)	
MT ANGEL, OR	DETAIL NO. 240

COMPACTION: CLASS 1 – 92% OPTIMUM PER AASHTO T–180
CLASS 3 – 85% OPTIMUM PER AASHTO T–180

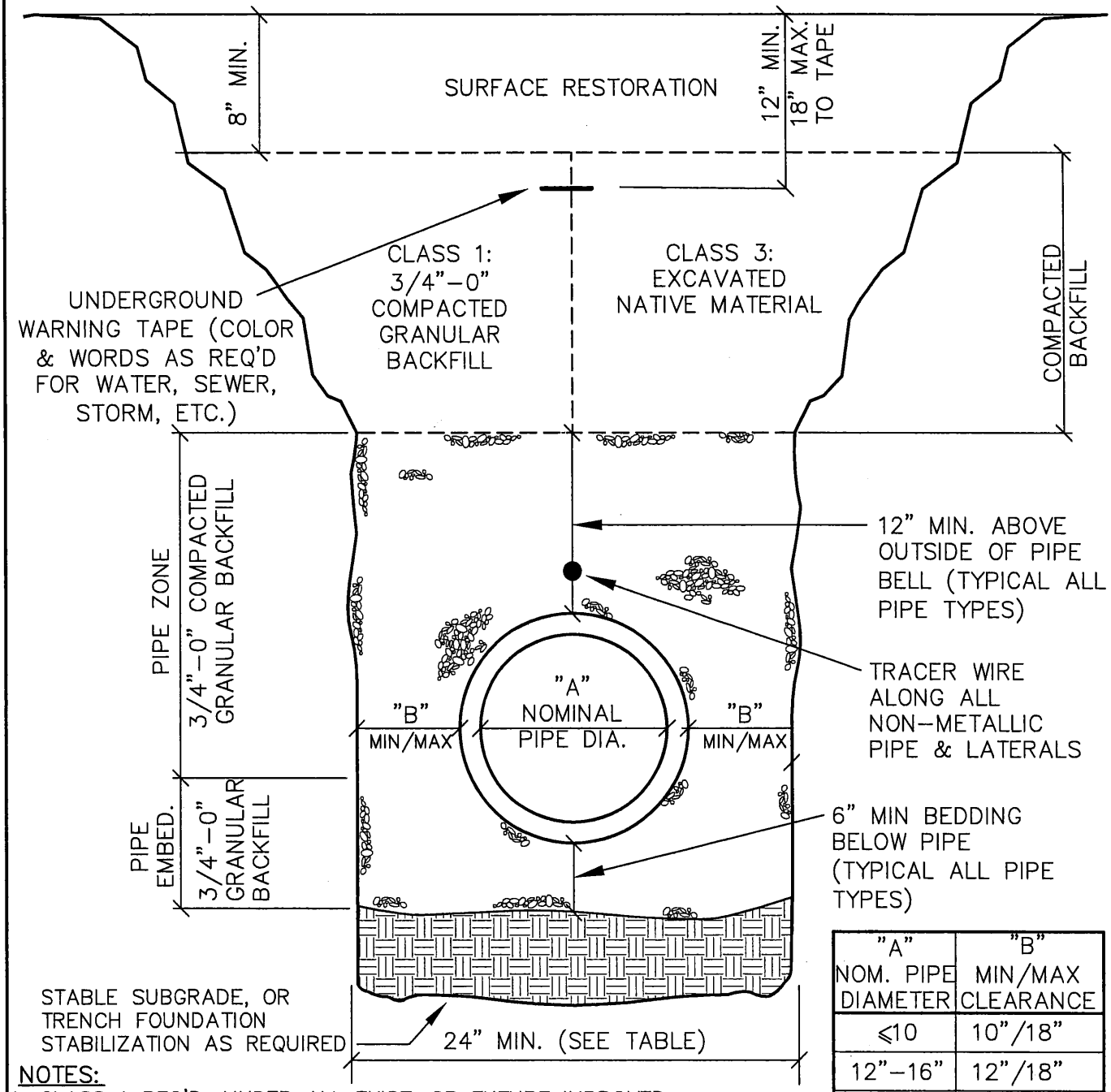

"A" NOM. PIPE DIAMETER	"B" MIN/MAX CLEARANCE
≤10	10"/18"
12"–16"	12"/18"
18"–21"	16"/24"
24"–30"	18"/30"
>30"	24"/36"

NOTES:

1. CLASS 1 REQ'D. UNDER ALL EXIST. OR FUTURE IMPROVED AREAS INCLUDING SIDEWALKS.
2. WHERE NEW PIPING IS IN SAME ALIGNMENT AS EXISTING PIPING, THE PIPE EMBEDMENT SHALL EXTEND TO A MIN. OF 6" BELOW THE NEW PIPING OR 6" BELOW EXISTING PIPING, WHICHEVER IS DEEPER.
3. FOR FLEXIBLE PIPE, BOTTOM OF TRENCH SHORING SHALL BE ABOVE PIPE SPRINGLINE PRIOR TO COMPACTING BACKFILL BELOW THE PIPE SPRINGLINE AND UNDER THE PIPE HAUNCHES.
4. MINIMUM CLEARANCES SHOWN ("B") ASSUMES STANDARD WALL TRENCH BOXES SET ON TRENCH BOTTOM, AND REPRESENTS WIDTH REQUIRED TO CONSOLIDATE GRANULAR MATERIAL UNDER PIPE HAUNCHES (TO AVOID LOSS OF SIDE SUPPORT WHEN TRENCH BOX IS MOVED OR PULLED FORWARD). TRENCH WIDTH REDUCTION REQUIRES PRIOR APPROVAL BASED ON ACTUAL TRENCH SHORING PROPOSED.

LAST REVISION DATE: SEPT 2013

TRENCH BACKFILL, BEDDING, AND PIPE ZONE

(NTS)

MT ANGEL, OR

DETAIL NO. 301

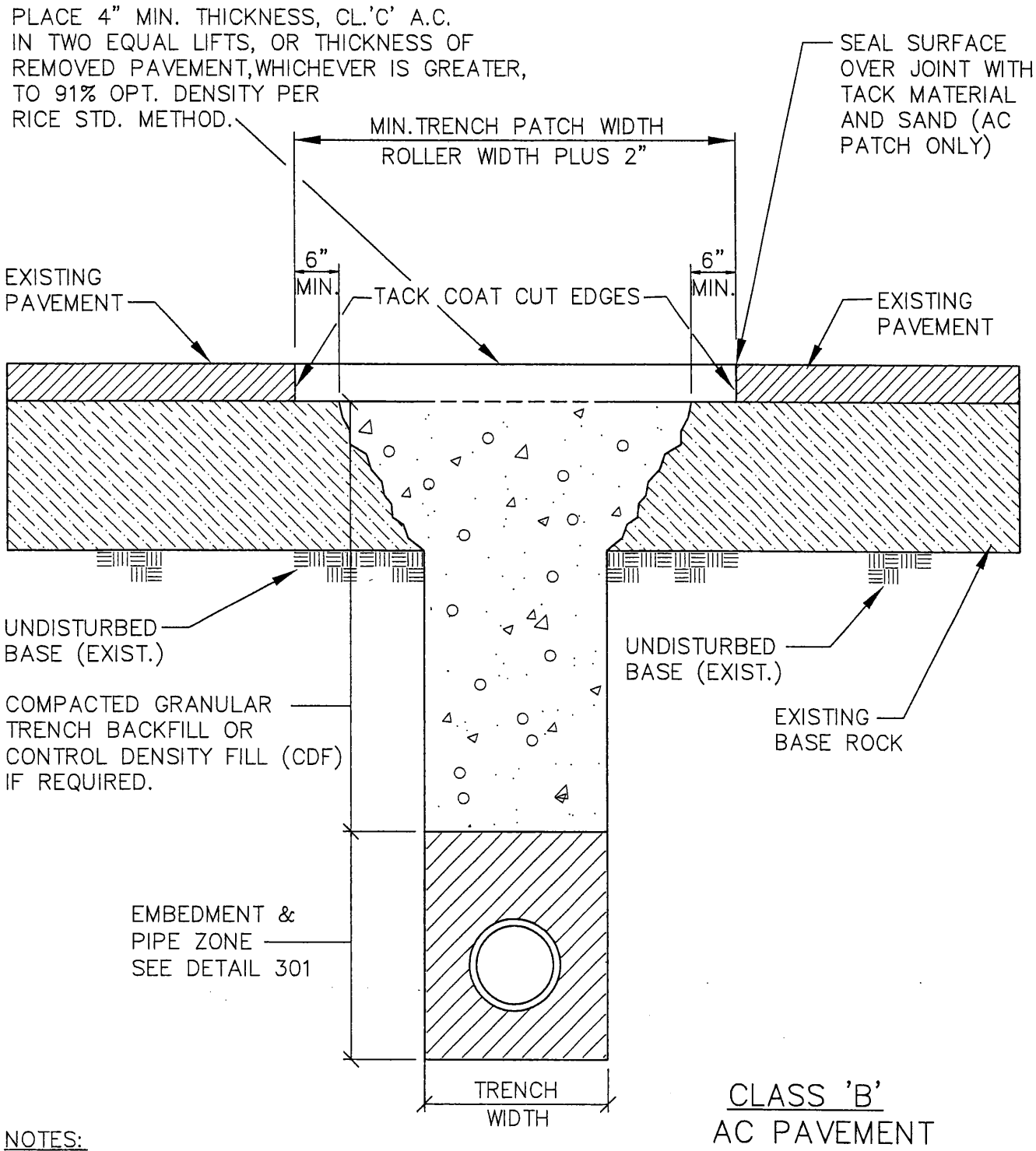

CLASS 'B'
AC PAVEMENT

NOTES:

1. ALL EXISTING AC OR PCC PAVEMENT SHALL BE SAWCUT PRIOR TO REPAVING.
2. PCC CONCRETE PAVEMENT SHALL BE REPLACED WITH 3300 PSI PCC TO A MINIMUM THICKNESS OF 6" OR TO THE THICKNESS OF REMOVED CONCRETE, WHICHEVER IS GREATER.
3. FOR PAVED DRIVEWAYS, (EXCEPT COMMERCIAL OR INDUSTRIAL), PAVEMENT THICKNESS MAY BE REDUCED TO 3" IN 2 LIFTS, AND OVERCUT MAY BE REDUCED TO 3" EACH SIDE.

LAST REVISION DATE: SEPT 2013	
MINOR OR PRIVATE STREET AND AC DRIVEWAY CUT SURFACE RESTORATION (NTS)	
MT ANGEL, OR	DETAIL NO. 302

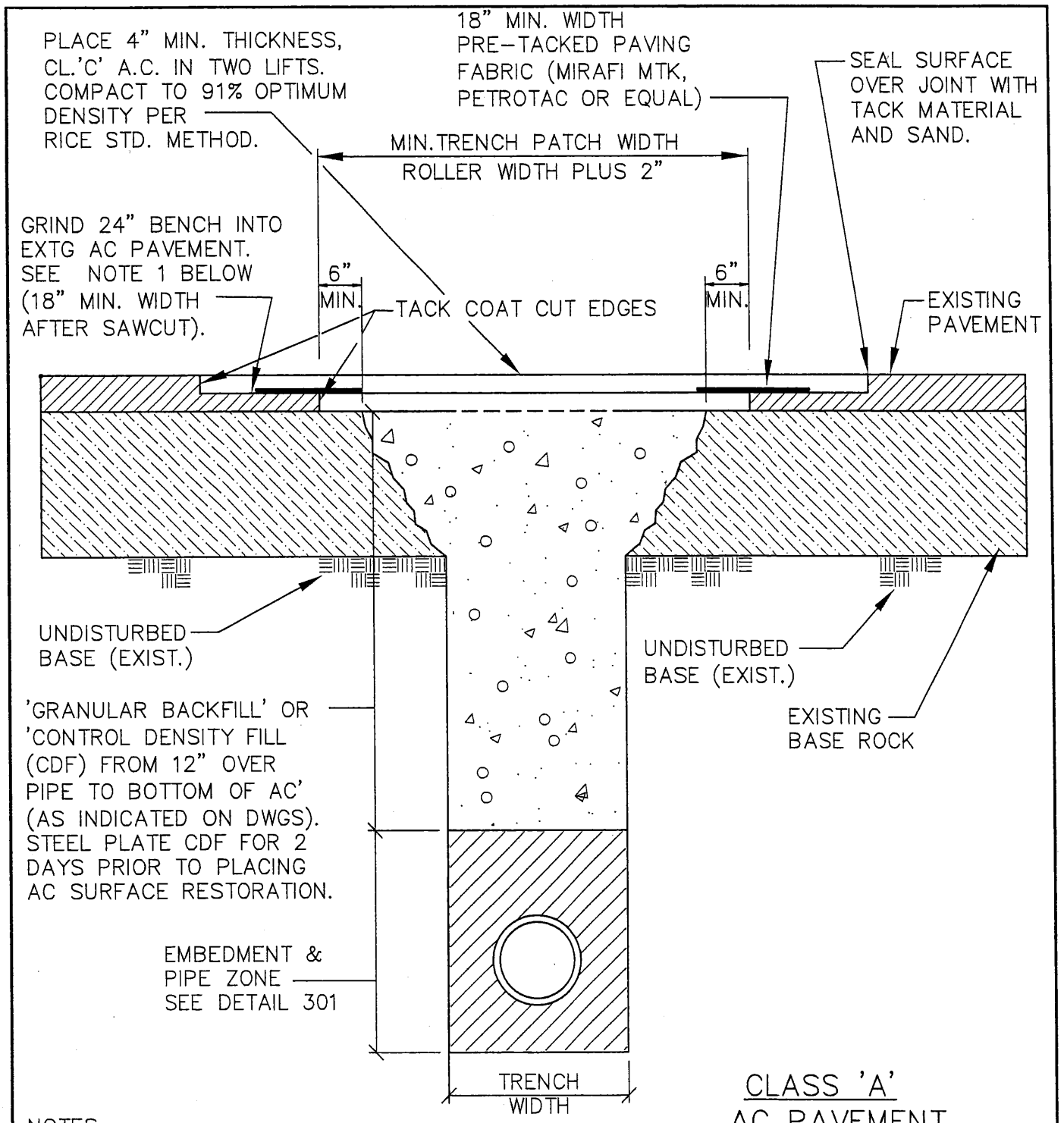

CLASS 'A' AC PAVEMENT

NOTES:

1. FOLLOWING BACKFILL COMPACTION OR CDF INSTALLATION, GRIND 24" WIDE BENCH IN EXISTING AC ON BOTH SIDES & TRENCH END, 1-1/2" DEEP OR HALF THE DEPTH OF EXISTING AC, WHICHEVER IS GREATER.
2. FOLLOWING GRINDING, SAWCUT ALL TRENCH EDGES 6" BACK FROM TRENCH EDGE.
3. TACK COAT CUT EDGES AND INSTALL BASE LIFT OF AC TO LEVEL OF BENCH GRIND.
4. INSTALL JOINT SEAL FABRIC, TACK COAT EDGES & INSTALL TOP LIFT OF AC. SAND SEAL ALL EDGES (REMOVE EXCESS SAND AFTER CURE).

LAST REVISION DATE: SEPT 2013	
AC STREET CUT SURFACE RESTORATION W/BENCH GRIND (NTS)	
MT ANGEL, OR	DETAIL NO. 302A

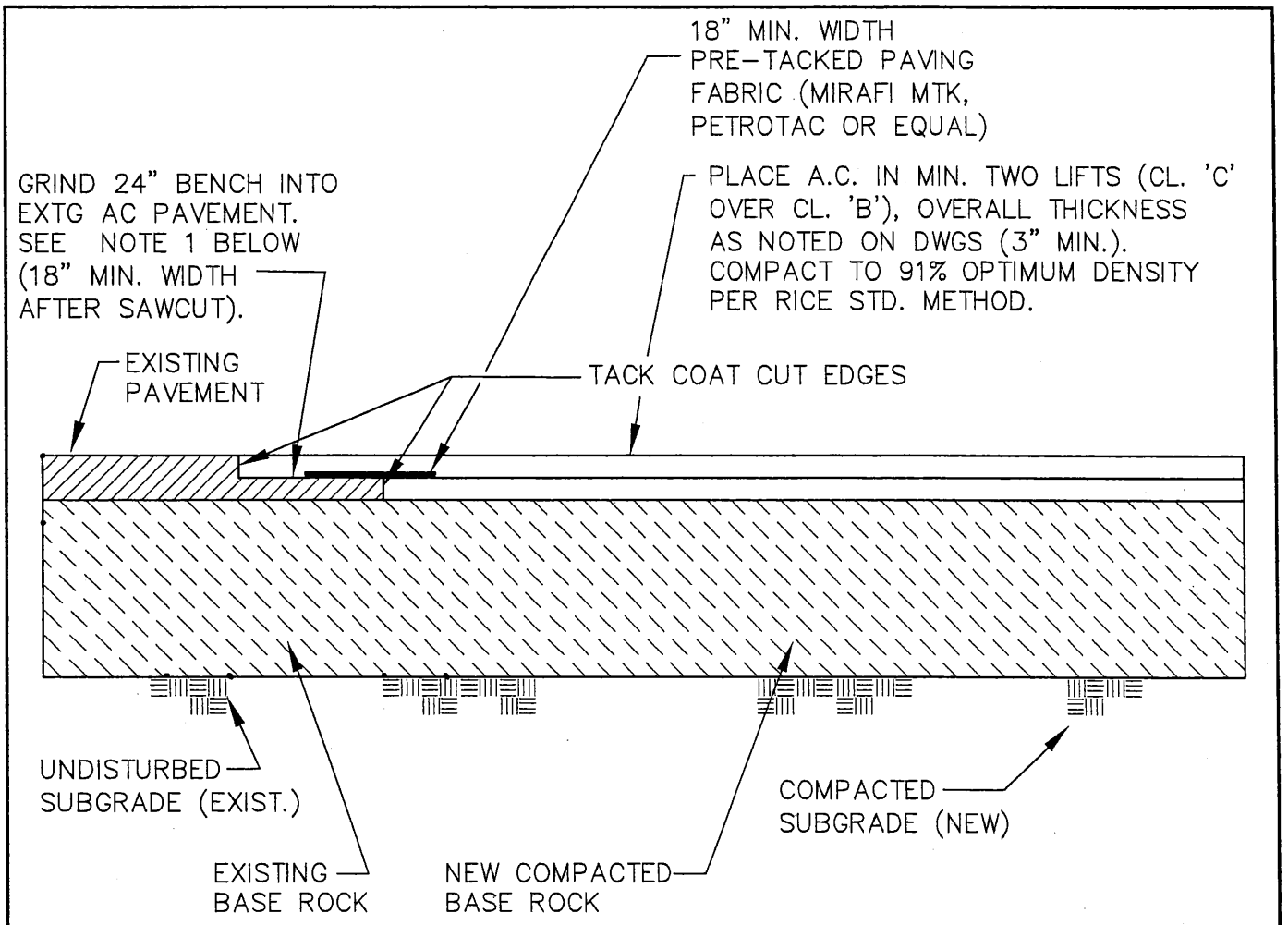

NOTES:

1. PRIOR TO SAWCUTTING, GRIND BENCH IN EXISTING AC 1-1/2' DEEP OR HALF THE DEPTH OF EXISTING AC, WHICHEVER IS GREATER. BENCH TO EXTEND TO A POINT 18" MINIMUM BACK FROM SAWCUT LOCATION.
2. FOLLOWING GRINDING, SAWCUT PAVEMENT EDGES.
3. TACK COAT CUT EDGES AND INSTALL BASE LIFT OF AC LEVEL WITH GROUND BENCH.
4. INSTALL JOINT SEAL FABRIC & TACK COAT EDGES & INSTALL TOP LIFT OF AC.
5. SAND SEAL ALL JOINTS (REMOVE EXCESS SAND AFTER CURE).

LAST REVISION DATE: SEPT 2013	
AC STREET CUT FOR STREET WIDENING (NTS)	
MT ANGEL, OR	DETAIL NO. 302B

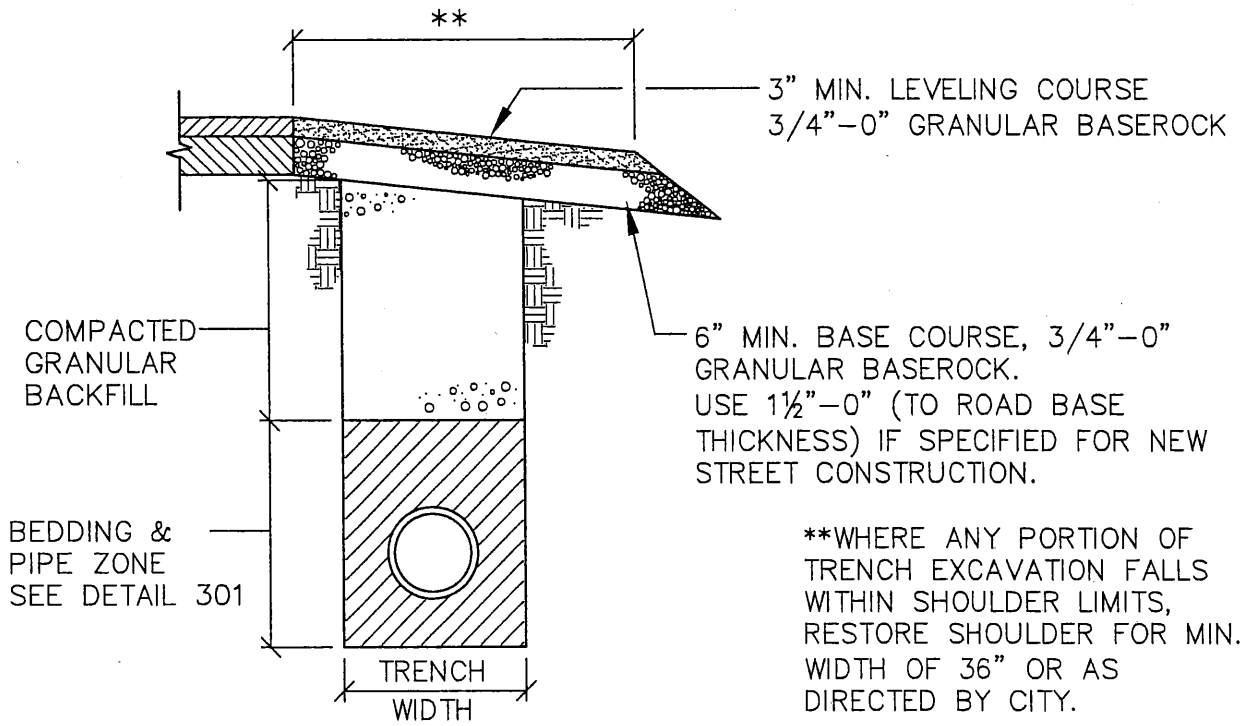

CLASS 'C'
GRAVEL SHOULDER

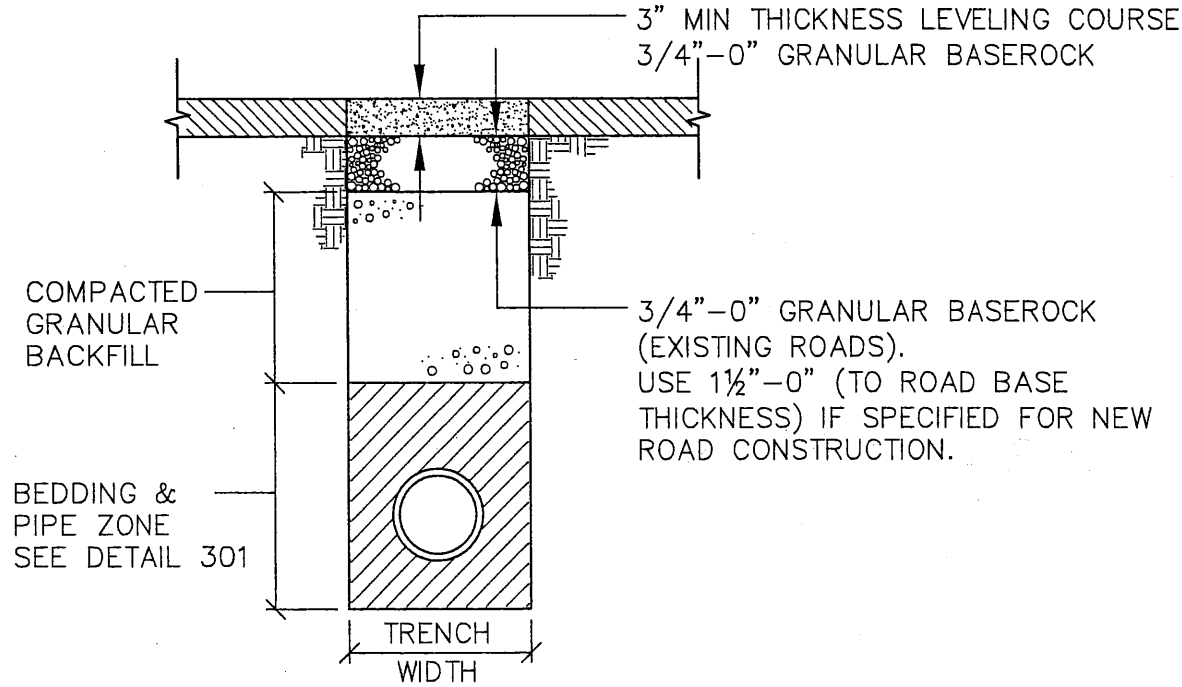

CLASS 'D'
GRAVEL STREET

NOTES:

1. COMPACTION STANDARD WILL BE 92% OPTIMUM PER AASHTO T-180

LAST REVISION DATE: SEPT 2013	
GRAVEL SURFACE RESTORATION (NTS)	
MT ANGEL, OR	DETAIL NO. 303

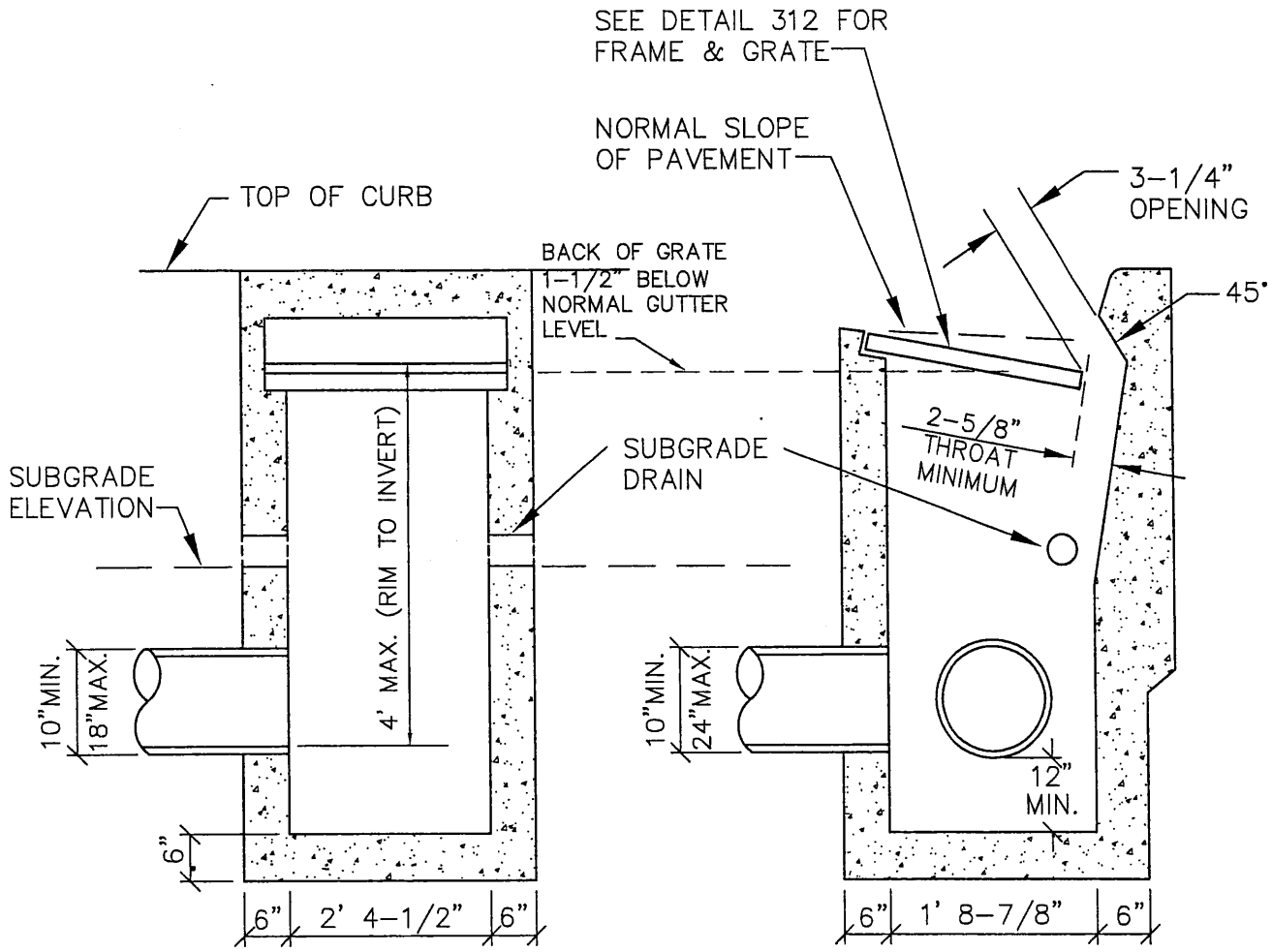

SECTION A–A

SECTION B–B

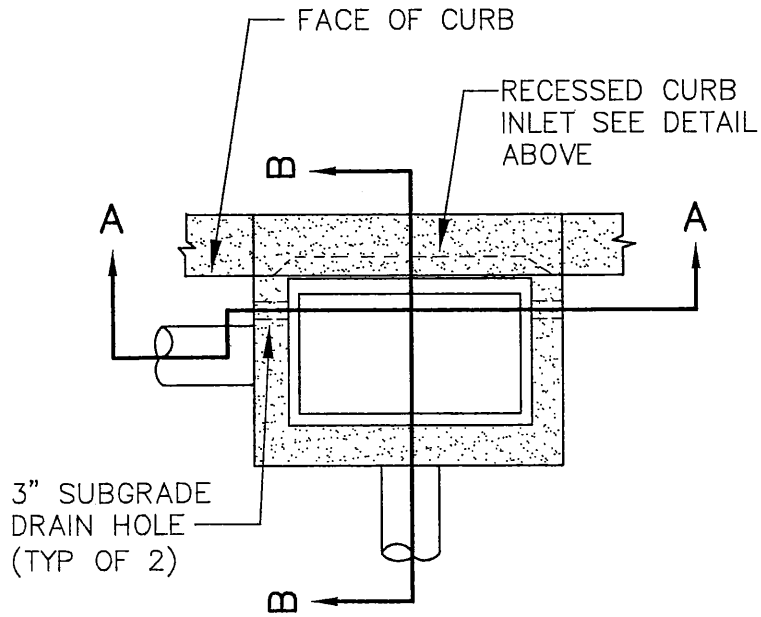

PLAN

NOTES:

1. SEE CONSTRUCTION DRAWINGS FOR PIPE SIZE, LOCATION AND INVERT ELEVATION.
2. ALL CONCRETE TO BE 3300 PSI @ 28 DAYS.
3. MATCH EXISTING CURB UNLESS OTHERWISE NOTED.
4. CURB–INLET NOTCH TO BE ELIMINATED AT DROP CURB LOCATIONS WHERE APPROVED BY THE CITY ENGINEER.

LAST REVISION DATE: SEPT 2013	COPYRIGHT 1996 WESTECH ENGINEERING, INC.
STANDARD SIDE-INLET GRATED CATCH BASIN (NTS)	
MT ANGEL, OR	DETAIL NO. 310

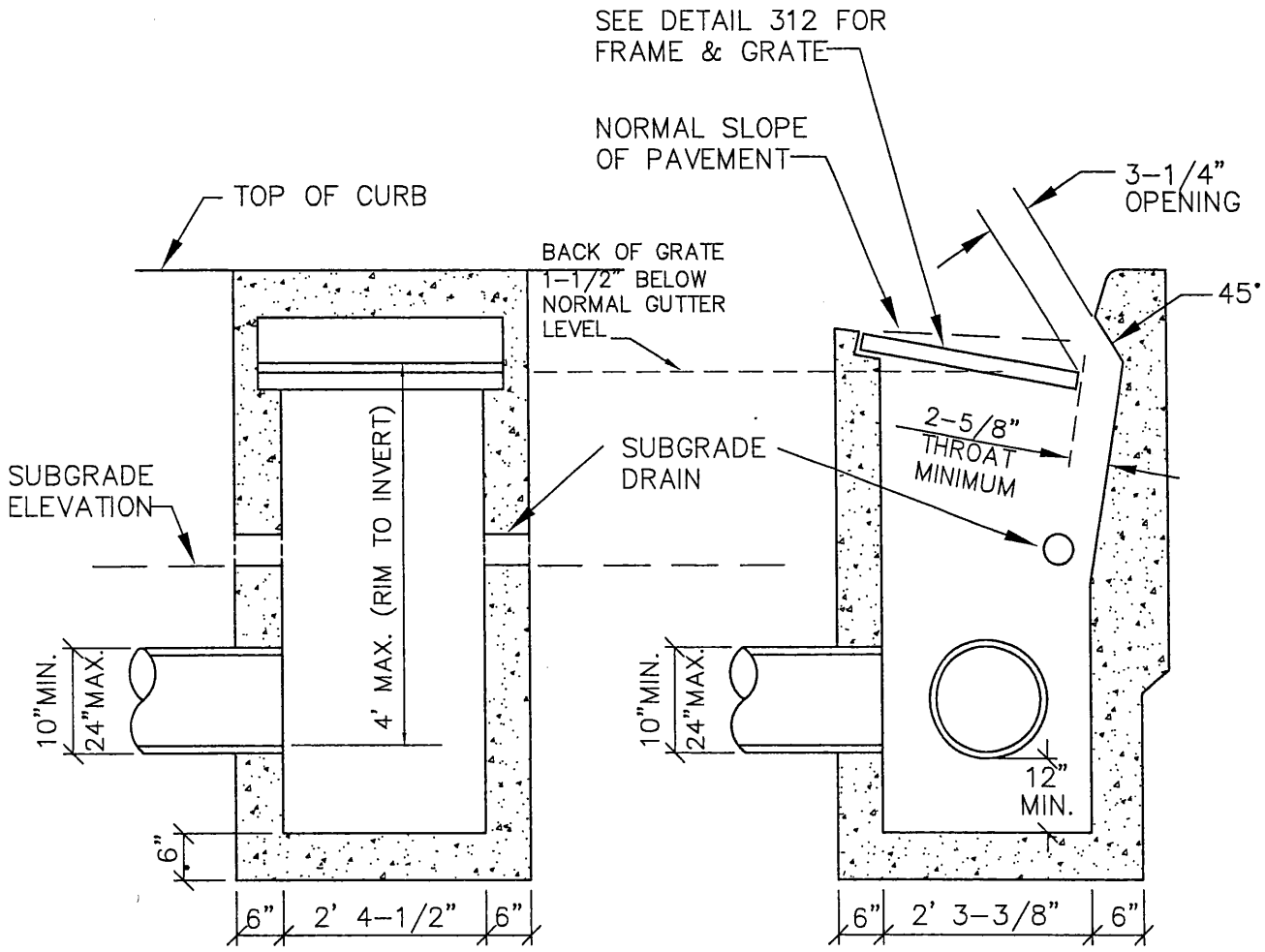

SECTION A–A

SECTION B–B

NOTES:

1. SEE CONSTRUCTION DRAWINGS FOR PIPE SIZE, LOCATION AND INVERT ELEVATION.
2. ALL CONCRETE TO BE 3300 PSI @ 28 DAYS.
3. MATCH EXISTING CURB UNLESS OTHERWISE NOTED.
4. CURB–INLET NOTCH TO BE ELIMINATED AT DROP CURB LOCATIONS WHERE APPROVED BY THE CITY ENGINEER.

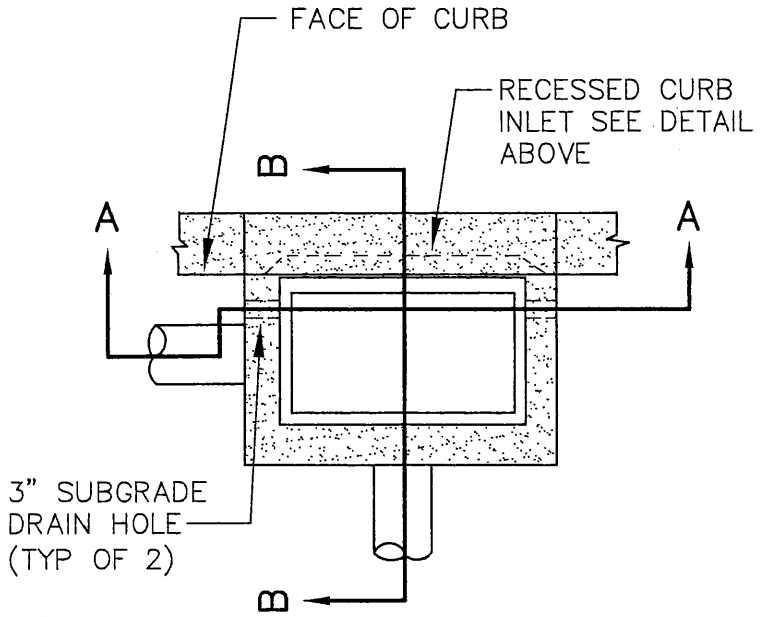

PLAN

LAST REVISION DATE: SEPT 2013	COPYRIGHT 1996 WESTECH ENGINEERING, INC.
OVERSIZE SIDE-INLET GRATED CATCH BASIN (NTS)	
MT ANGEL, OR	DETAIL NO. 311

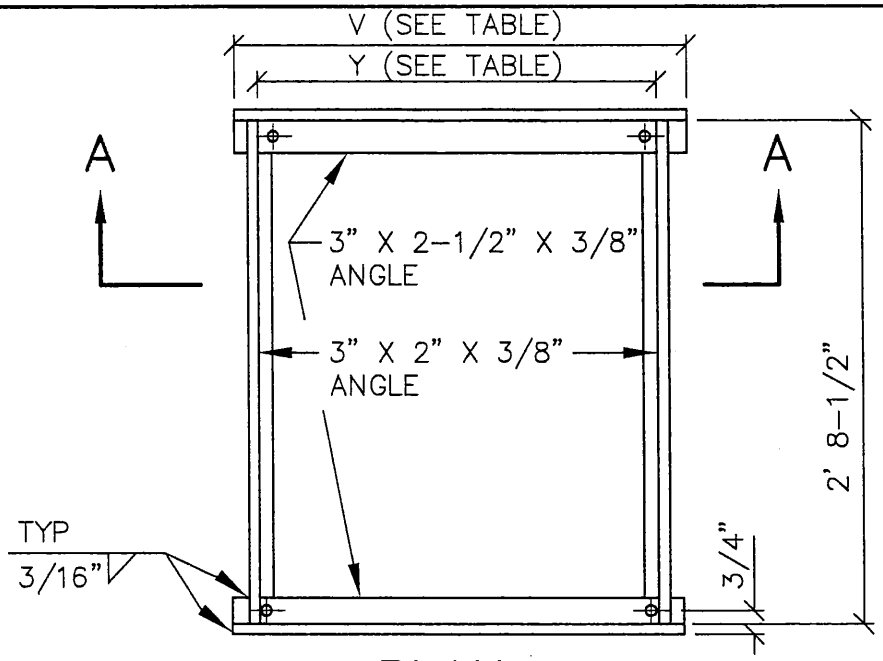

PLAN

NOTE:

3/8" ROUND OR RECTANGULAR CROSS BARS SHALL BE FILLET WELDED, RESISTANCE WELDED OR ELECTROFORGED TO BEARING BARS.

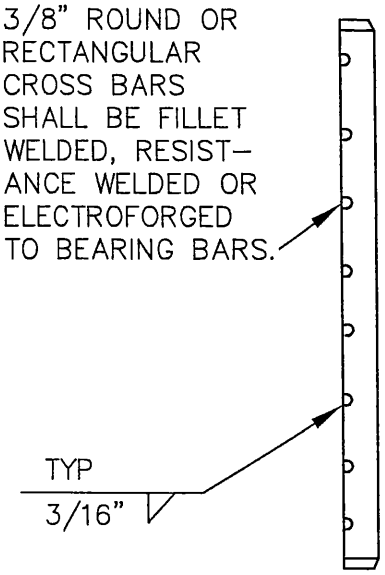

SECTION B-B

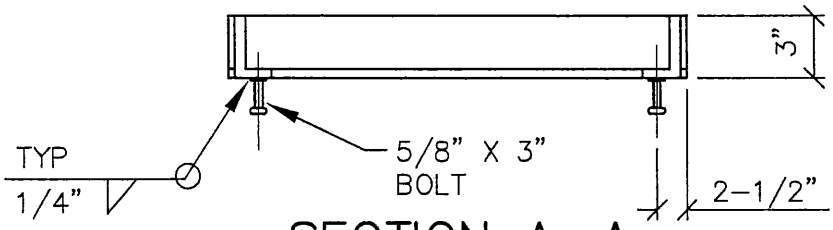

SECTION A-A

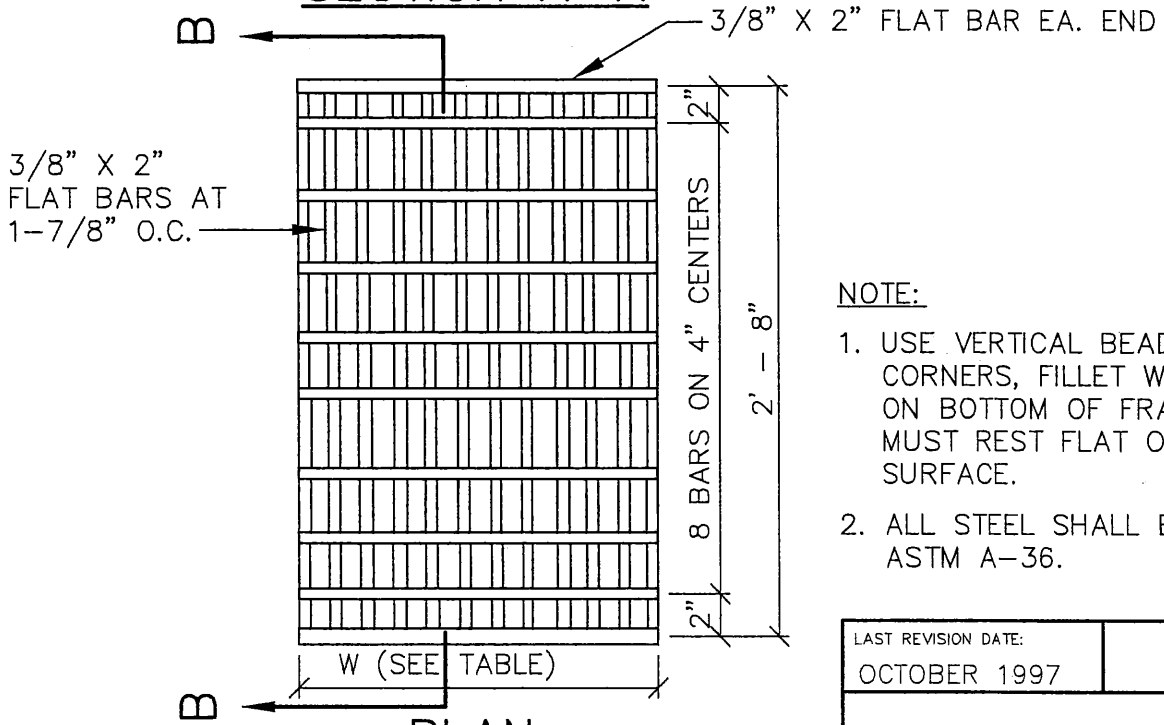

PLAN

NOTE:

1. USE VERTICAL BEADS IN CORNERS, FILLET WELD JOINT ON BOTTOM OF FRAME. GRATE MUST REST FLAT ON FRAME SURFACE.
2. ALL STEEL SHALL BE ASTM A-36.

INLET TYPE	FRAME V	FRAME Y	GRATE W	GRATE NO. OF BARS	GRATE REMARKS
STANDARD	1' 10-3/4"	1' 9-3/8"	1'- 9"	12	1-GRATE
OVERSIZE	2' 4-3/4"	2' 3-3/8"	1' 1-1/2"	8	2-GRATES

LAST REVISION DATE: OCTOBER 1997

COPYRIGHT 1996 WESTECH ENGINEERING, INC.

CATCH BASIN GRATE DETAILS

(NTS)

MT ANGEL, OR

DETAIL NO. 312

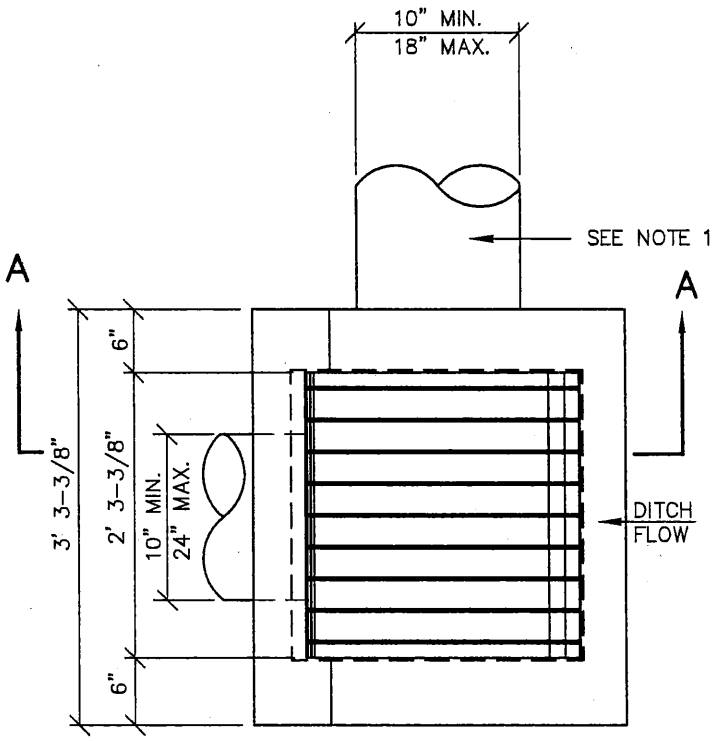

PLAN

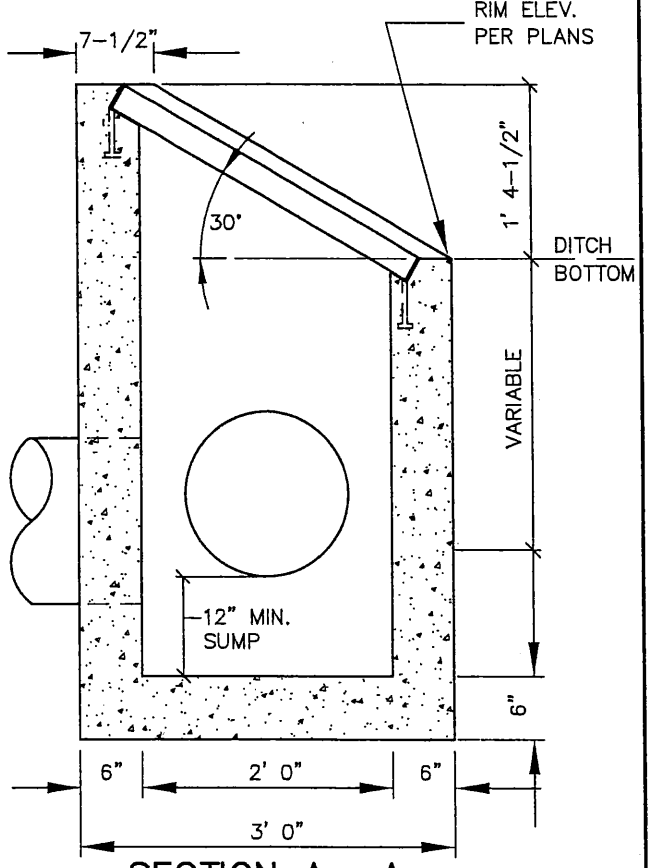

SECTION A -A

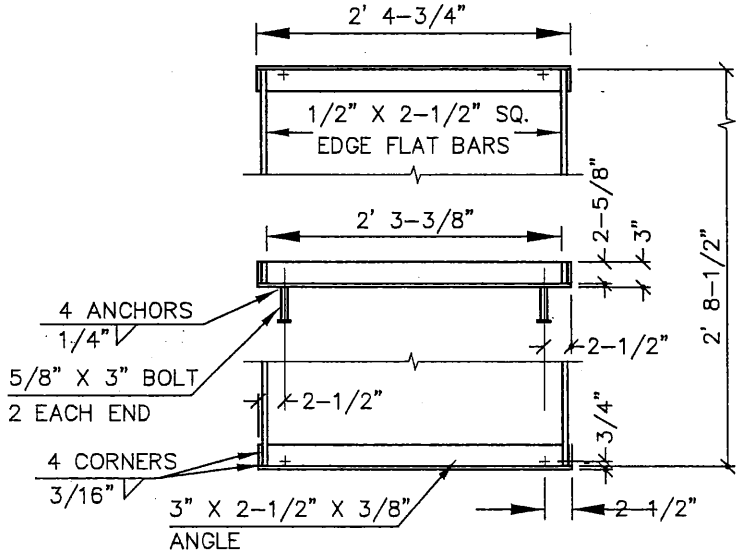

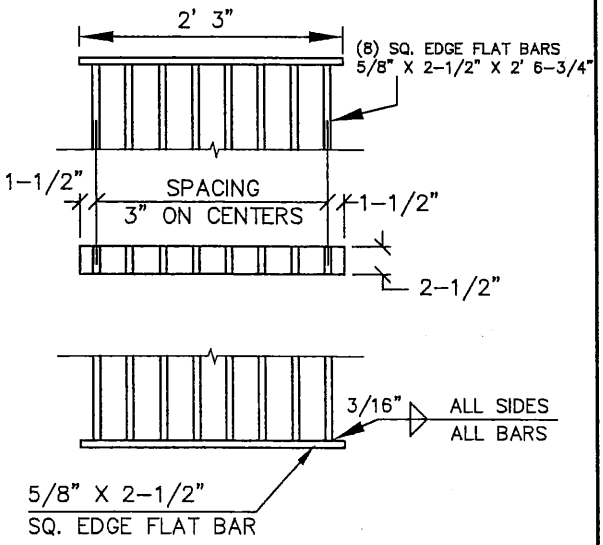

FRAME & GRATE

NOTES:

1. SEE CONSTRUCTION DRAWINGS FOR PIPE SIZE, LOCATION AND INVERT ELEVATION.
2. FRAME & GRATE SHALL BE ASTM A-36 STEEL, HOT-DIPPED GALV. AFTER CONSTRUCTION.
3. ALL CONCRETE TO BE 3000 PSI AT 28 DAYS.

LAST REVISION DATE: OCTOBER 1997	COPYRIGHT 1996 WESTECH ENGINEERING, INC.
TYPE 3 DITCH INLET CATCH BASIN (NTS)	
MT ANGEL, OR	DETAIL NO. 313

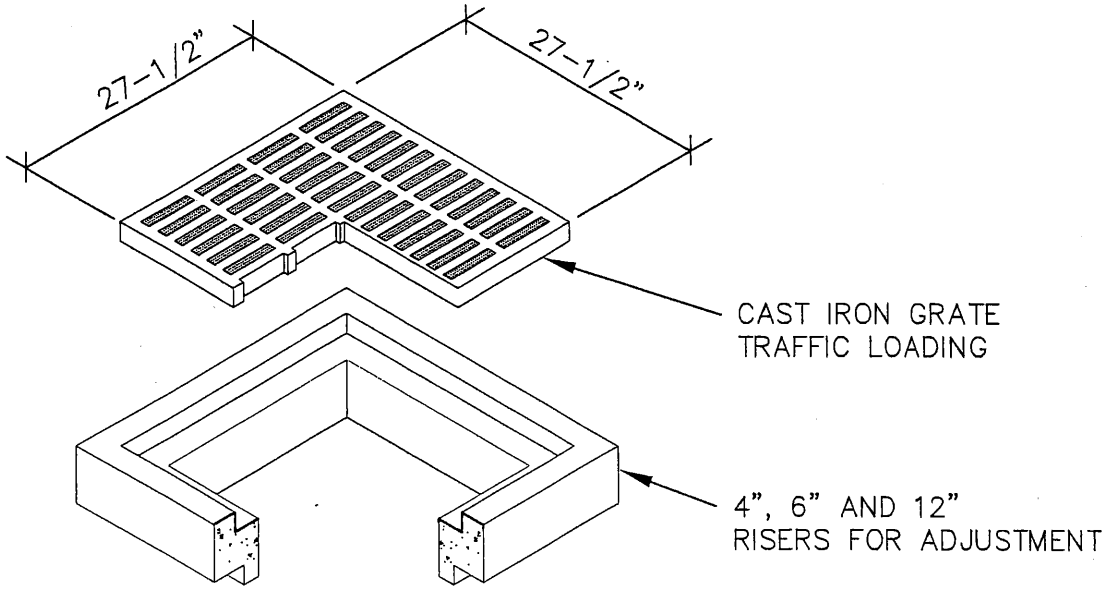

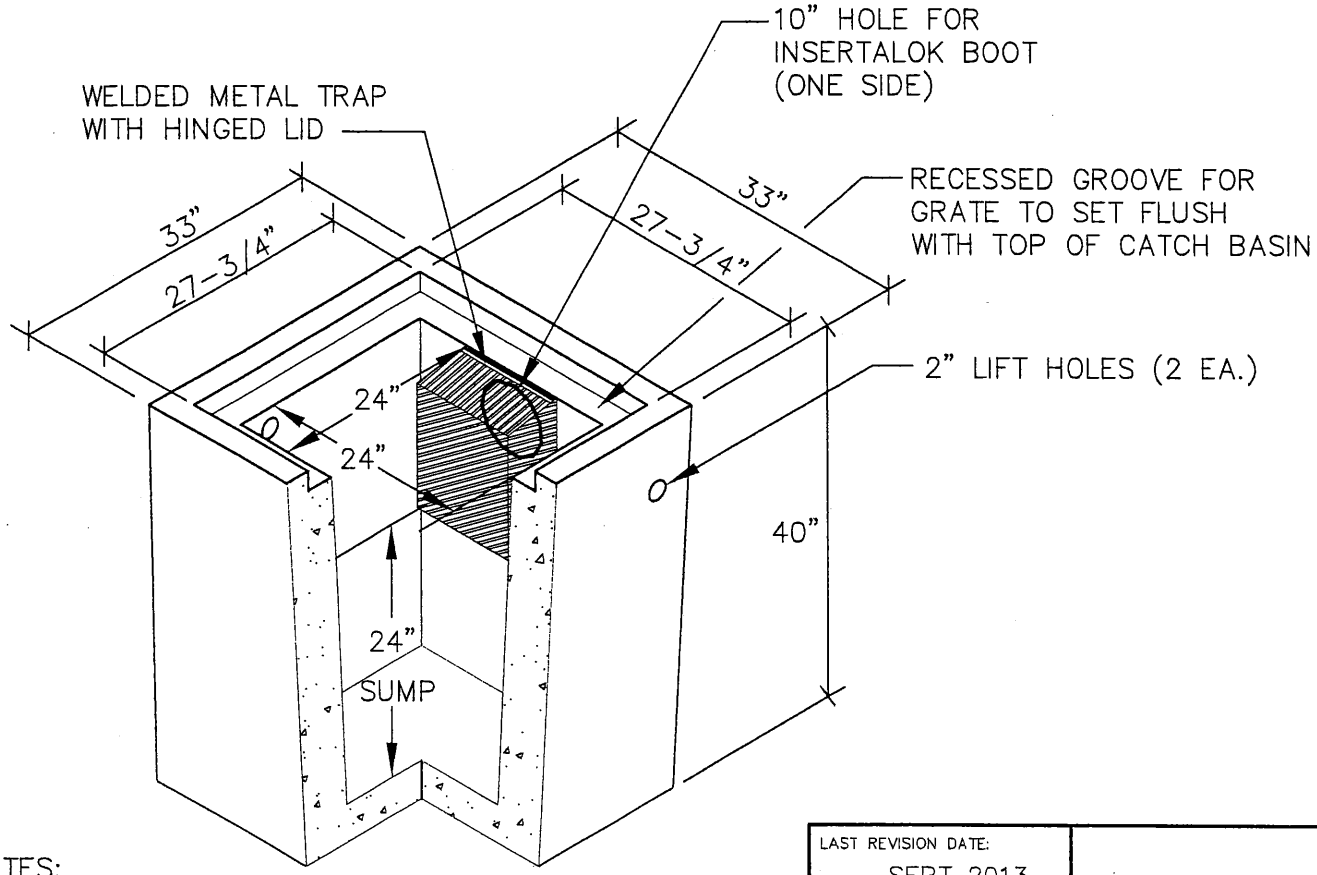

NOTES:

1. SEE CONSTRUCTION DRAWINGS FOR PIPE SIZE, LOCATION AND INVERT ELEVATION.
2. CONCRETE SHALL BE 4000 PSI @ 28 DAYS.
3. REBAR SHALL CONFORM TO ASTM A615 GRADE 60.
4. REBAR SHALL BE MIN. #4 BARS @ 6" C.C.
5. SET CB SQUARE WITH BUILDINGS OR WITH EDGE OF PARKING LOT OR DRIVEWAY WHEREIN IT LIES.
6. ADJUST PAVING SO WATER FLOWS TO CB WITH NO PONDING.

LAST REVISION DATE: SEPT 2013	
PARKING LOT CATCH BASIN (PRECAST CONCRETE) (NTS)	
MT ANGEL, OR	DETAIL NO. 315

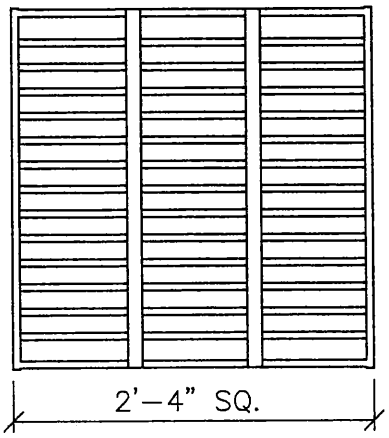

GRATE: WELDED STEEL DROP-IN BAR GRATE (ASTM A36).
END BARS: 1/2" X 2"
CROSS BARS: 1/2" X 2" @ 2" O.C.
BIKE STRAPS: 1/8" X 1" (2 REQ'D)
16,000 LB. UNIFORM LOAD CAPACITY

GRATE DETAIL

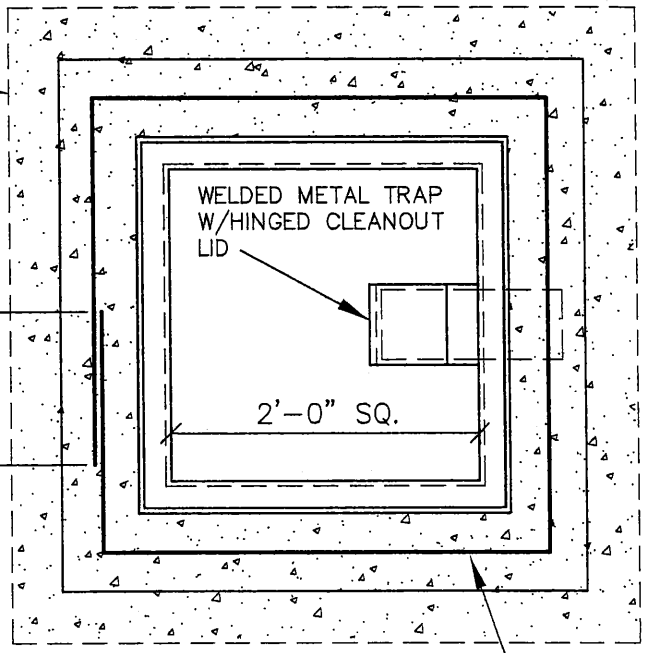

PLAN VIEW

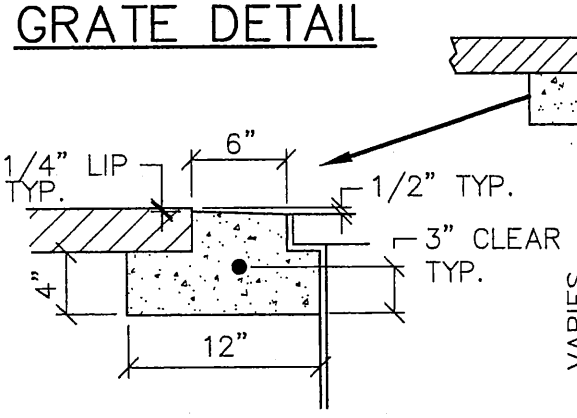

CONCRETE COLLAR

CONSTRUCT BASIN OF WELDED 1/4" STEEL. COAT ALL SURFACES WITH ASPHALTIC PAINT.

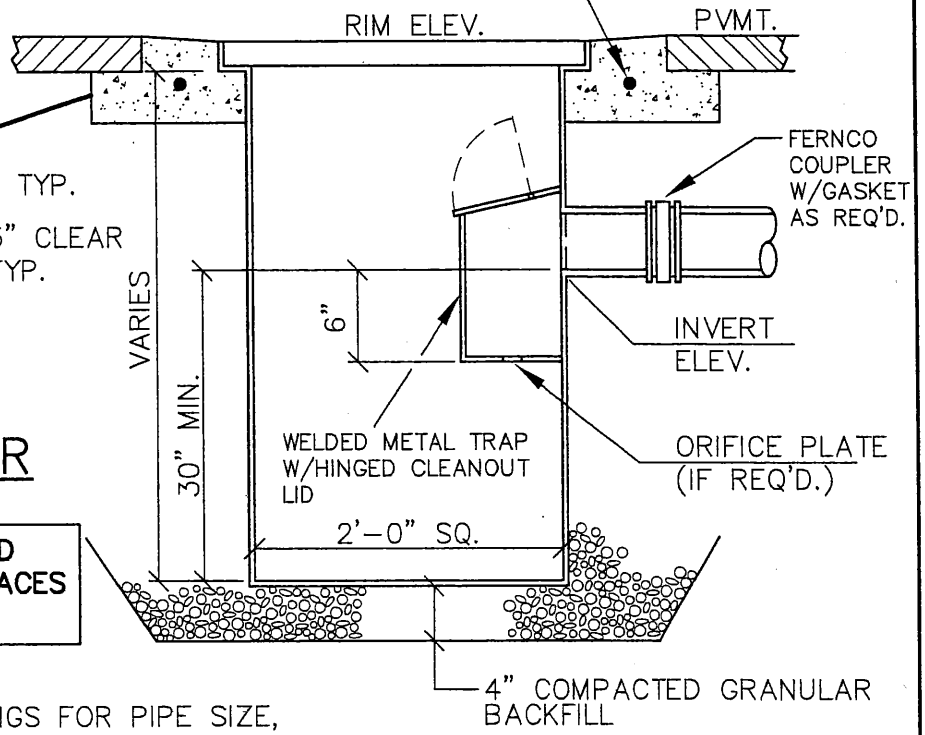

NOTES:

1. SEE CONSTRUCTION DRAWINGS FOR PIPE SIZE, LOCATION AND INVERT ELEVATION.
2. OUTLET: SIZE AS REQ'D. FOR INDICATED PIPE SIZE.
3. FOR JUNCTION BOX, REPLACE GRATE WITH 3/4" STEEL PLATE. DRILL ONE, 1" LIFTING HOLE, CENTERED IN ONE END OF THE PLATE. WELD SHIMS TO RIM AS REQUIRED TO RAISE PLATE TO RIM ELEVATION.
4. SET CB SQUARE WITH BUILDINGS OR WITH EDGE OF PARKING LOT OR DRIVEWAY WHEREIN IT LIES.
5. ADJUST PAVING SO WATER FLOWS TO CB WITH NO PONDING.

LAST REVISION DATE: SEPT 2013	
PARKING LOT CATCH BASIN (LYNCH STYLE) (NTS)	
MT ANGEL, OR	DETAIL NO. 316

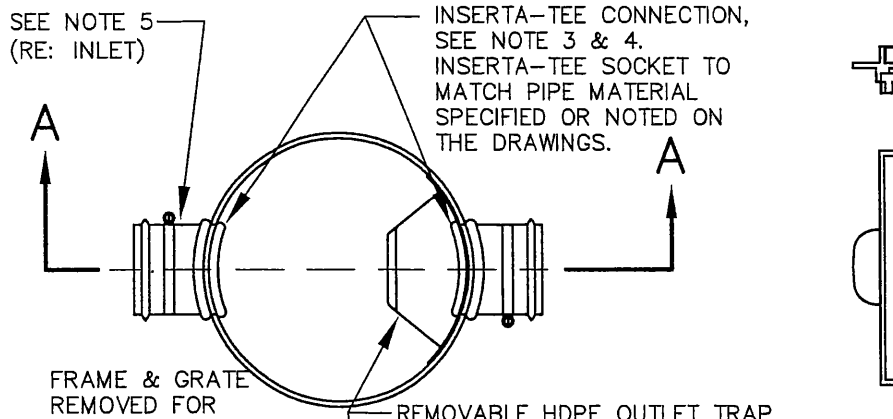

PLAN

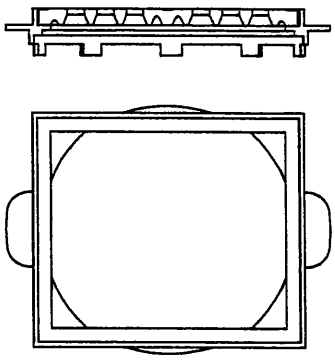

FRAME TO INCLUDE TABS THAT MATCH BASIN OD TO PREVENT DISPLACEMENT. FRAME BODY TO BEAR ON COMPACTED BASEROCK (SEE SECTION A-A)

FRAME

REMOVABLE HDPE OUTLET TRAP REQUIRED ON ALL PRIVATE CATCH BASINS (OMIT FOR FLOW-THRU JUNCTION STRUCTURES). ALL CLIPS & HARDWARE TO BE STAINLESS STEEL.

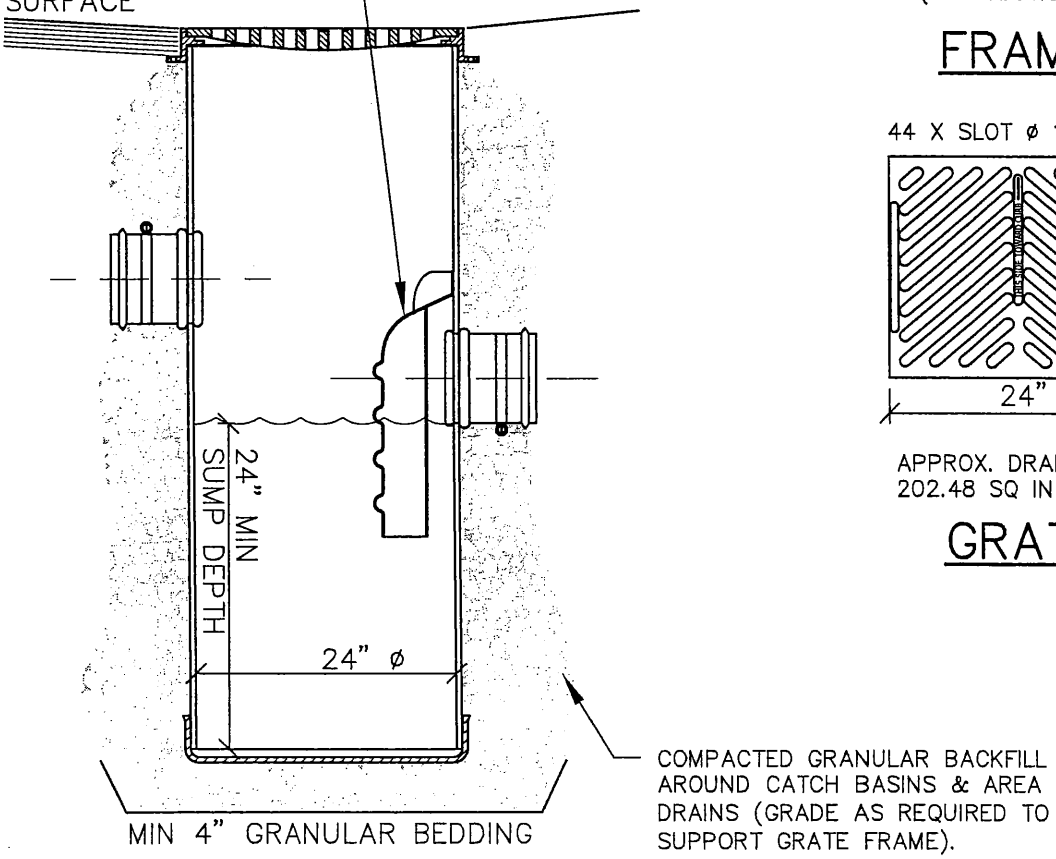

SECTION A-A

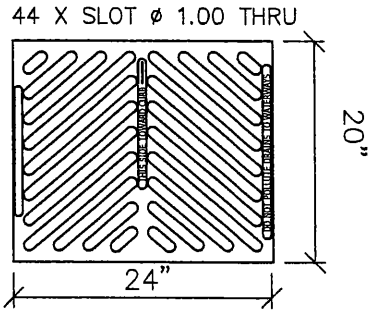

APPROX. DRAIN AREA = 202.48 SQ IN

GRATE

NOTE: PER ORS 92.044(7), AREA DRAIN MUST BE SET 1' MINIMUM CLEAR FROM ANY SURVEY MONUMENT

NOTES:

1. NYLOPLAST TRAFFIC RATED DRAIN BASIN OR APPROVED EQUAL W/NYLOPLAST FRAME & GRATE.
2. HERRING-BONE STYLE GRATE TO BE DUCTILE IRON PER ASTM A536 GRADE 70-50-05.
3. SEE CONSTRUCTION DRAWINGS FOR PIPE SIZE, LOCATION, ORIENTATION AND INVERT ELEVATIONS.
4. CONNECTIONS TO PVC CATCH BASIN TO BE INSERTA-TEE STYLE FITTINGS (FACTORY OR FIELD INSTALLED).
5. FLOW-THRU CONFIGURATION SHOWN IS ALLOWED ONLY FOR AREA DRAINS OR JUNCTION BOXES.
6. SET CB GRATE SQUARE WITH BUILDINGS OR WITH EDGE OF PARKING LOT OR DRIVEWAY WHEREIN IT LIES.
7. ADJUST PAVING OR GRADING SO WATER FLOWS TO STRUCTURE INLET WITH NO PONDING.

LAST REVISION DATE: SEPT 2013	JO #
PARKING LOT CATCH BASIN (TRAFFIC RATED PVC w/TRAP, DUCTILE IRON FRAME/GRATE) (NTS)	
MT ANGEL, OR	DETAIL NO. 317

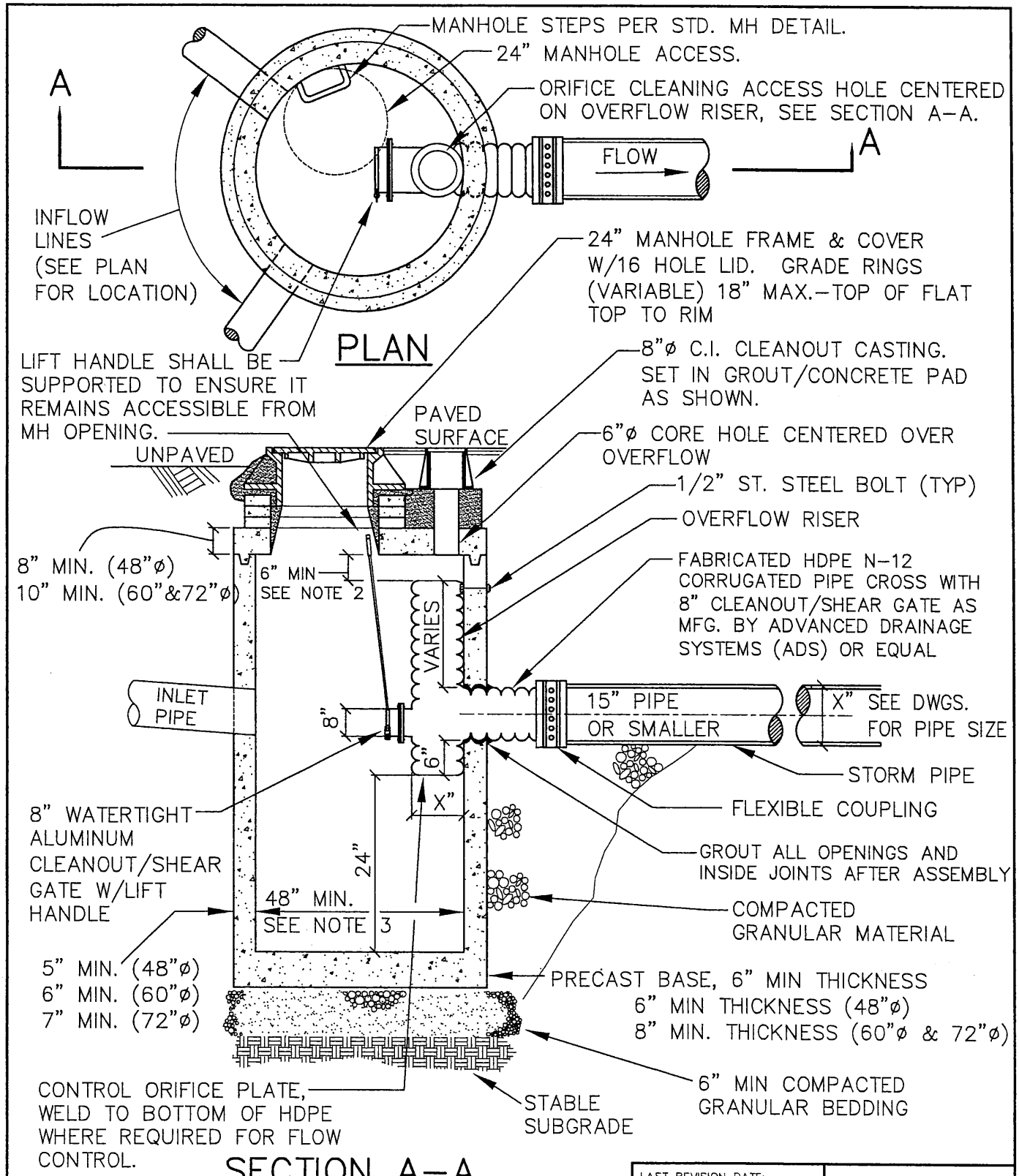

NOTES:

1. PRECAST SECTIONS SHALL CONFORM TO ASTM C-478.
2. DISTANCE FROM TOP OF OVERFLOW TO MH RIM SHALL BE BASED ON OVERFLOW CAPACITY CALC'S BY DESIGN ENGINEER (ASSUME ORIFICE CONTROL).
3. 60" MINIMUM DIA. MANHOLE REQUIRED FOR OUTLET PIPE LARGER THAN 15" OR INLET > 21".
4. ORIFICE CLEANING ACCESS TO BE 6" CORE HOLE THROUGH FLAT-TOP (CENTERED ON OVERFLOW) WITH CI CLEANOUT BOX GROUTED TO SLAB.

LAST REVISION DATE: SEPT 2013	
POLLUTION/FLOW CONTROL MANHOLE W/OVERFLOW (NTS)	
MT ANGEL, OR	DETAIL NO. 320

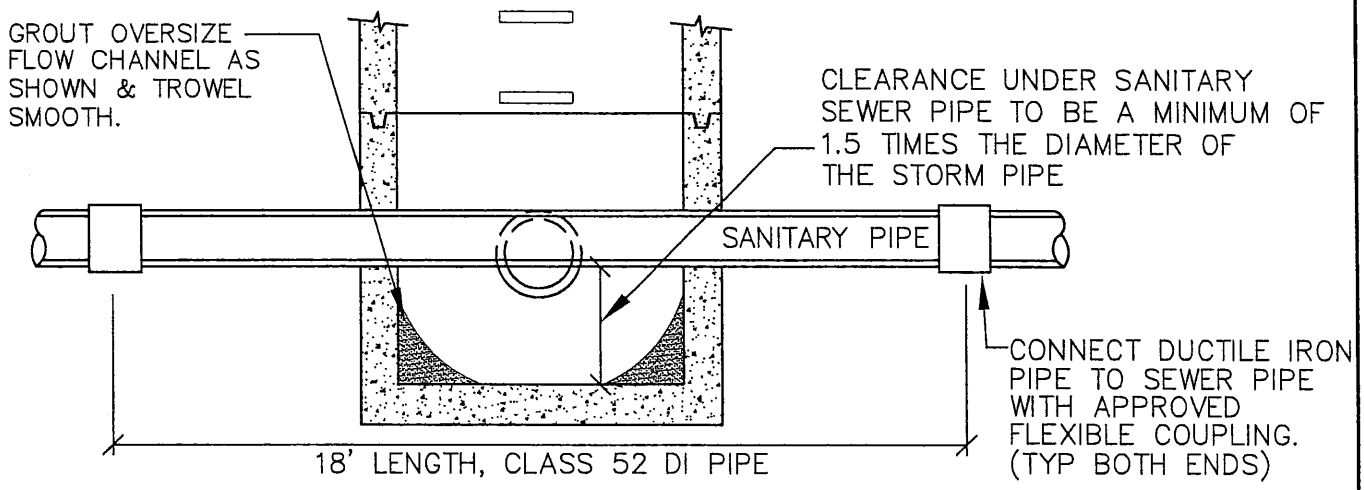

SECTION THRU SANITARY SEWER

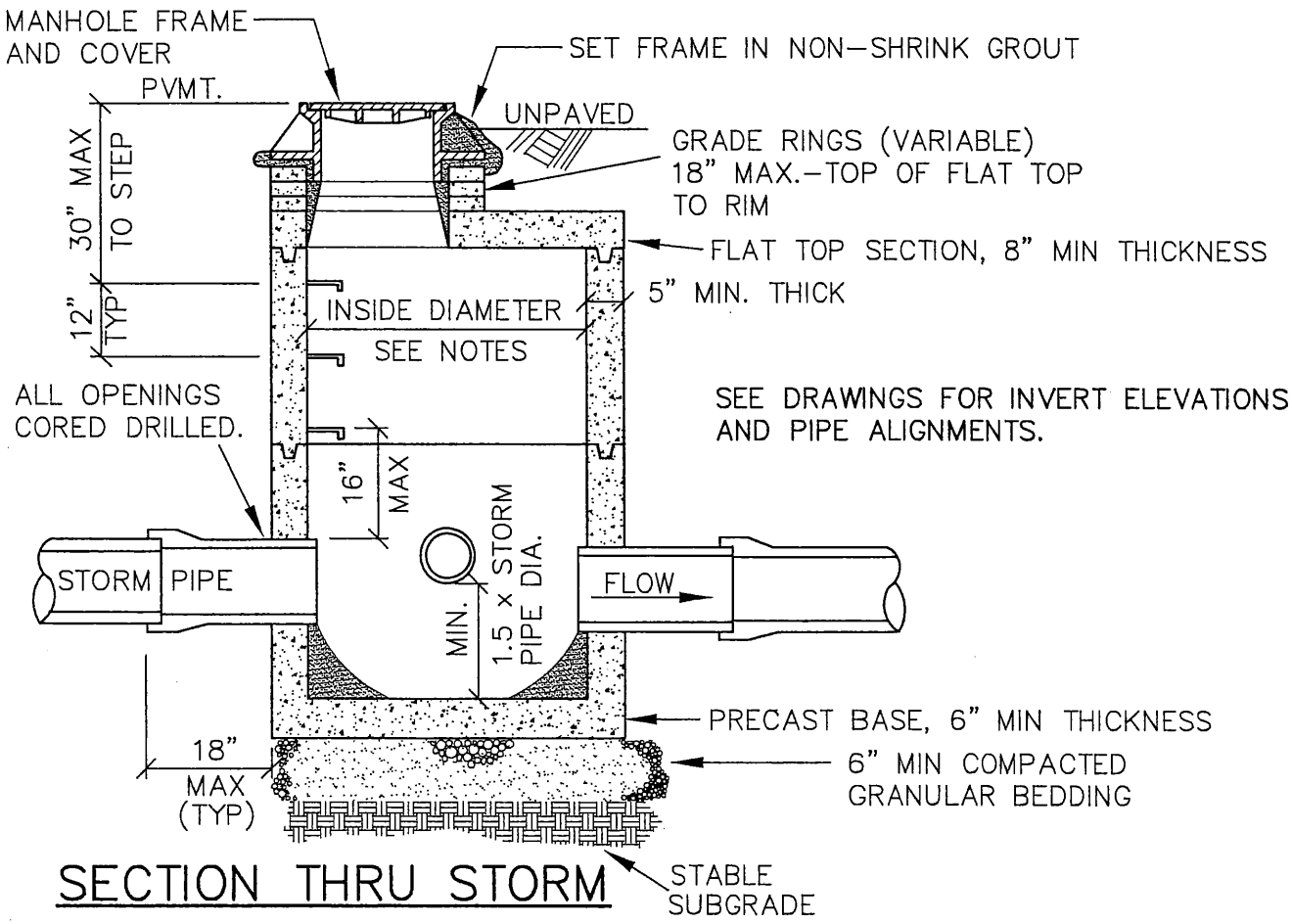

SECTION THRU STORM

NOTES:

1. UNLESS OTHERWISE SHOWN ON DRAWINGS, USE 48" MANHOLE FOR SANITARY SEWER UP TO 12" DIA. & STORM DRAIN UP TO 18" DIAMETER.
2. PRECAST SECTIONS SHALL MEET OR EXCEED ASTM C-478. WATERTIGHT O-RING OR MASTIC KEYLOCK JOINTS REQUIRED.
3. STEPS TO BE FACTORY INSTALLED POLYPROPYLENE PLASTIC WITH GRADE 60 REINFORCING ROD.

LAST REVISION DATE: SEPT. 2013	
KUENZI MANHOLE (NTS)	
MT ANGEL, OR	DETAIL NO. 330

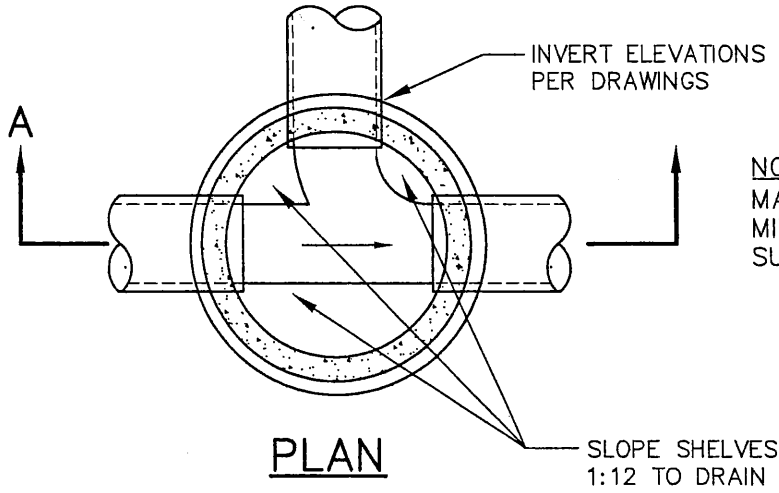

NOTE: PER ORS 92.044(7), MANHOLE MUST BE SET 1' MINIMUM CLEAR FROM ANY SURVEY MONUMENT

PLAN

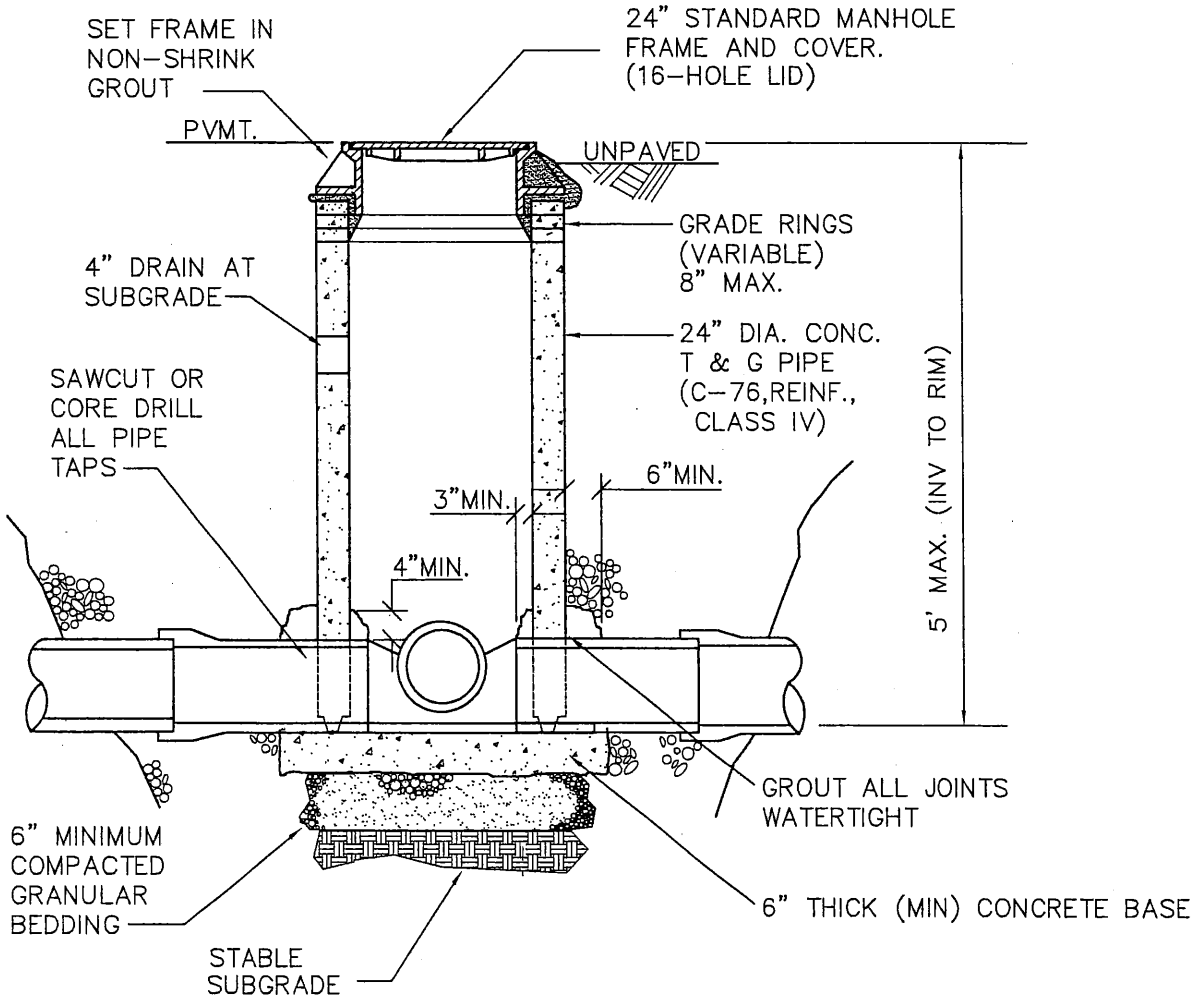

SECTION A-A

NOTE:

1. MAXIMUM PIPE NUMBER & DIAMETERS AS FOLLOWS:
   12" DIAMETER OR LESS - 4 MAXIMUM.
   15" DIAMETER - 2 MAXIMUM.
   ALL OTHER CONFIGURATIONS REQUIRE STANDARD MANHOLE.

LAST REVISION DATE: SEPT 2013	
24" DIA. STORM MANHOLE (NTS)	
MT ANGEL, OR	DETAIL NO. 350

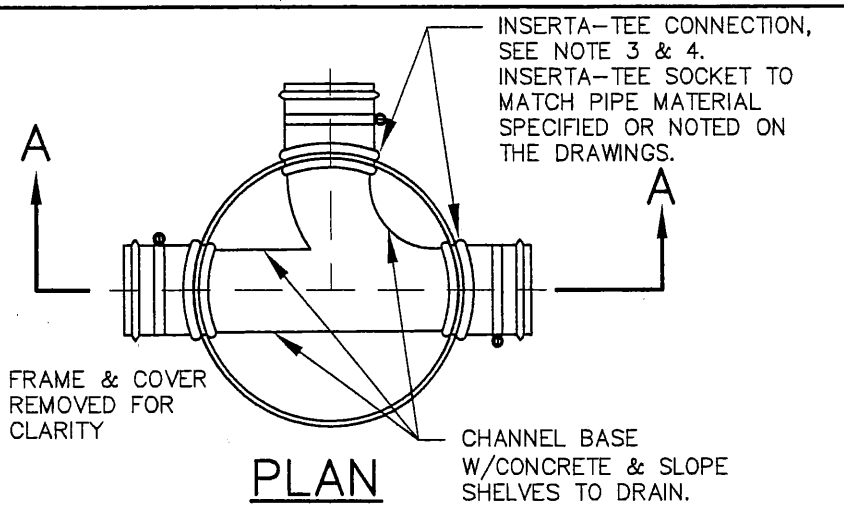

PLAN

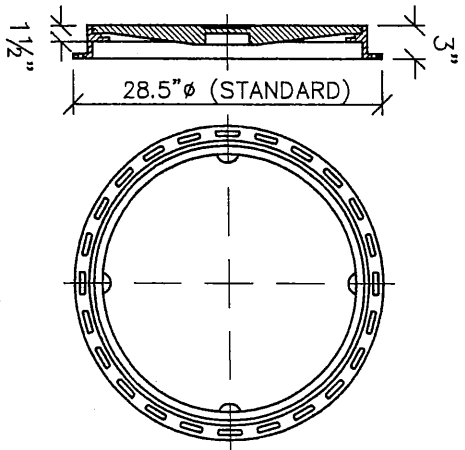

FRAME TO INCLUDE TABS THAT MATCH BASIN OD TO PREVENT DISPLACEMENT. FRAME BODY TO BEAR ON COMPACTED BASEROCK (SEE SECTION A-A)

FRAME

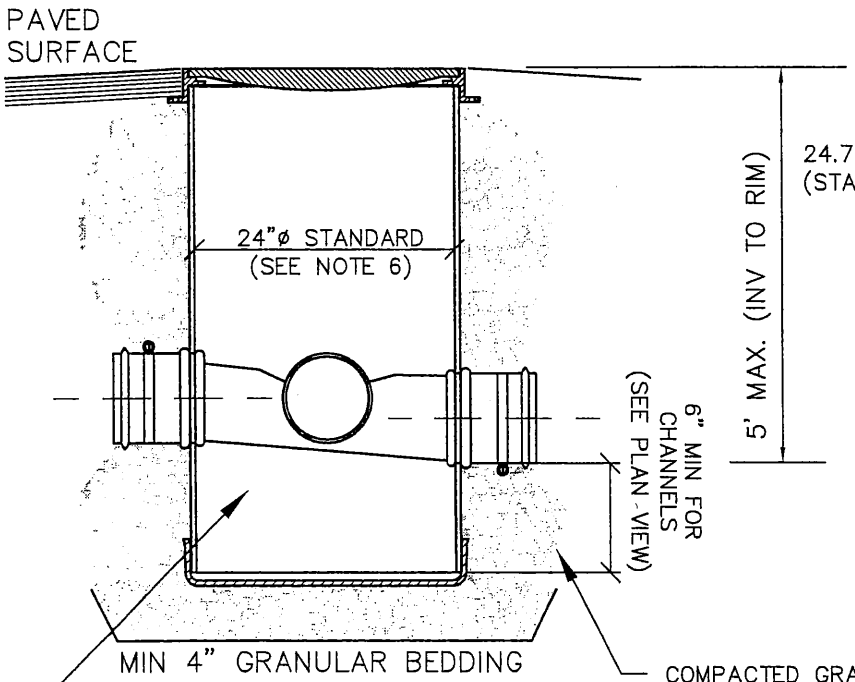

SECTION A-A

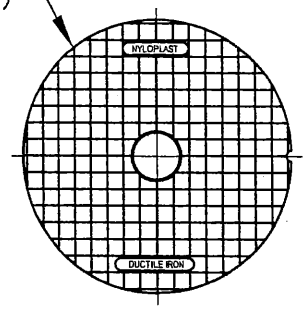

PROVIDE A MINIMUM OF (2) 1" DIAMETER PICK HOLES IN SOLID LID, OR PROVIDE STANDARD 16-HOLE STORM MANHOLE LID.

SOLID LID

NOTES:

1. NYLOPLAST TRAFFIC RATED DRAIN BASIN OR APPROVED EQUAL WITH NYLOPLAST FRAME & MH LID.
2. MH FRAME & COVER TO BE DUCTILE IRON PER ASTM A536 GRADE 70-50-05.
3. SEE CONSTRUCTION DRAWINGS FOR PIPE SIZE, LOCATION, ORIENTATION AND INVERT ELEVATIONS.
4. CONNECTIONS TO PVC MANHOLE TO BE INSERTA-TEE STYLE FITTINGS (FACTORY OR FIELD INSTALLED).
5. FIVE (5) FOOT MAXIMUM ALLOWABLE DEPTH FROM RIM TO OUTLET INVERT (DEEPER APPLICATIONS REQUIRE 48" MANHOLE).
6. MAXIMUM NUMBER & CONFIGURATION OF PIPE CONNECTIONS TO BE BASED ON INSERTA-TEE RECOMMENDATIONS. PROVIDE 30" DIAMETER BASIN & 30" SOLID COVER IF REQUIRED DUE TO NO. OF PIPES, SPACING &/OR ANGLES (30" MH TO MEET ALL DETAIL REQUIREMENTS SHOWN EXCEPT DIAMETER).

NOTE: PER ORS 92.044(7), MANHOLE MUST BE SET 1' MINIMUM CLEAR FROM ANY SURVEY MONUMENT

LAST REVISION DATE: SEPT 2013	JD #
24" DIA. STORM MANHOLE (TRAFFIC RATED PVC W/SOLID DUCTILE IRON FRAME/COVER) (NTS)	
MT ANGEL, OR	DETAIL NO. 351

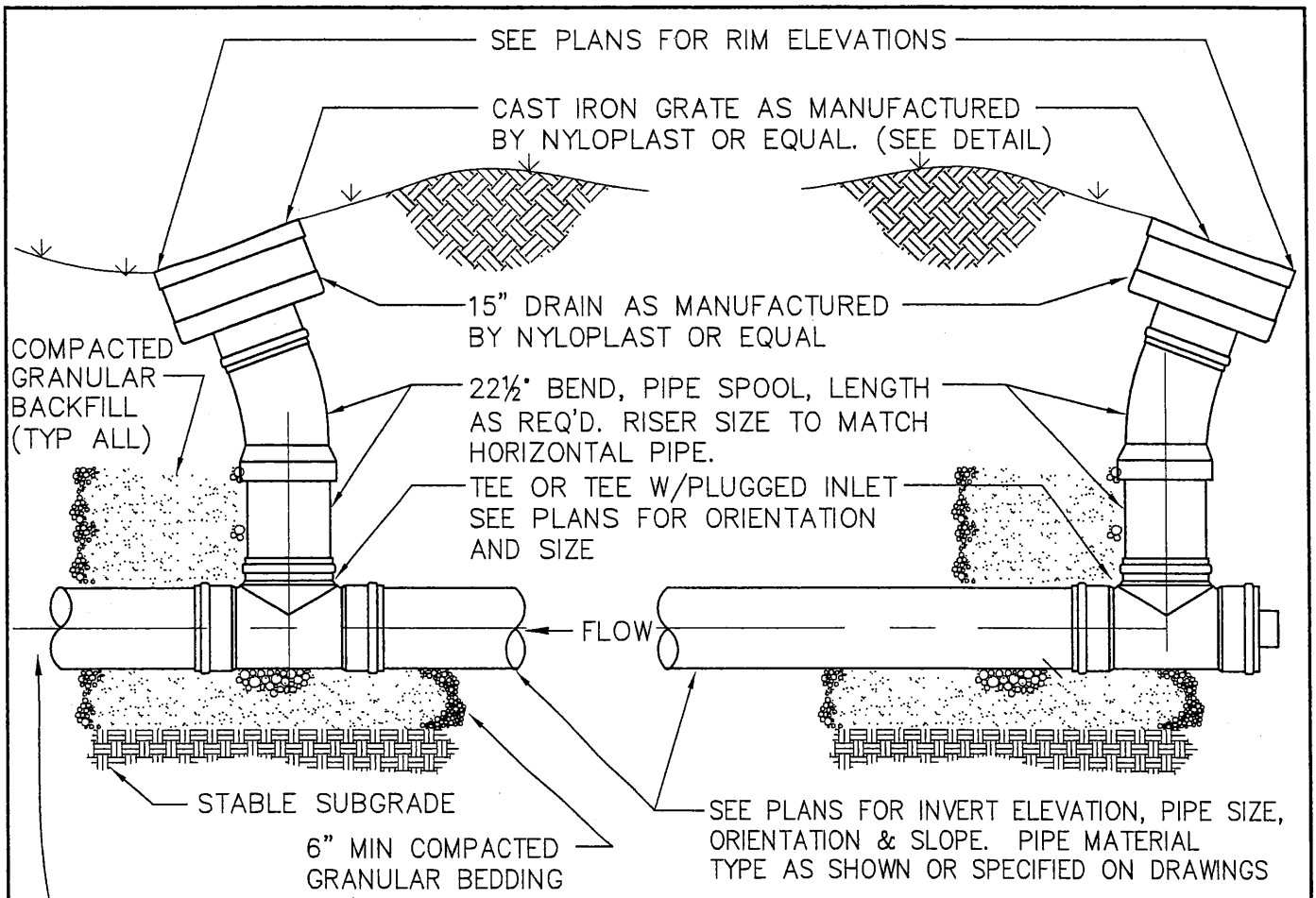

AREA DRAIN

NTS

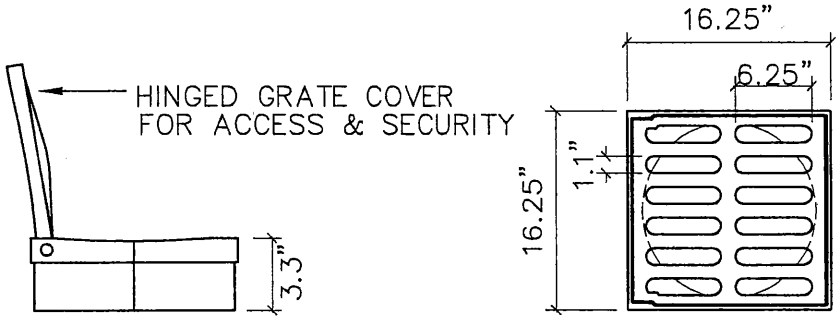

STANDARD

15" CAST IRON GRATE DETAIL

NTS

NOTES:

1. AREA DRAIN NOT FOR USE IN AREAS SUBJECT TO VEHICLE TRAFFIC.
2. USE WATERTIGHT GASKETED FITTINGS AND ADAPTORS FOR ALL PIPE CONNECTIONS.
3. ALL GRATES IN PEDESTRIAN AREAS SHALL CONFORM WITH ADA REQUIREMENTS, INCLUDING GRATE OPENING SIZE.

LAST REVISION DATE: SEPT 2013	JO # STANDARD
PRIVATE AREA DRAIN, NON-TRAFFIC AREAS (NTS)	
MT ANGEL, OR	DETAIL NO. 355

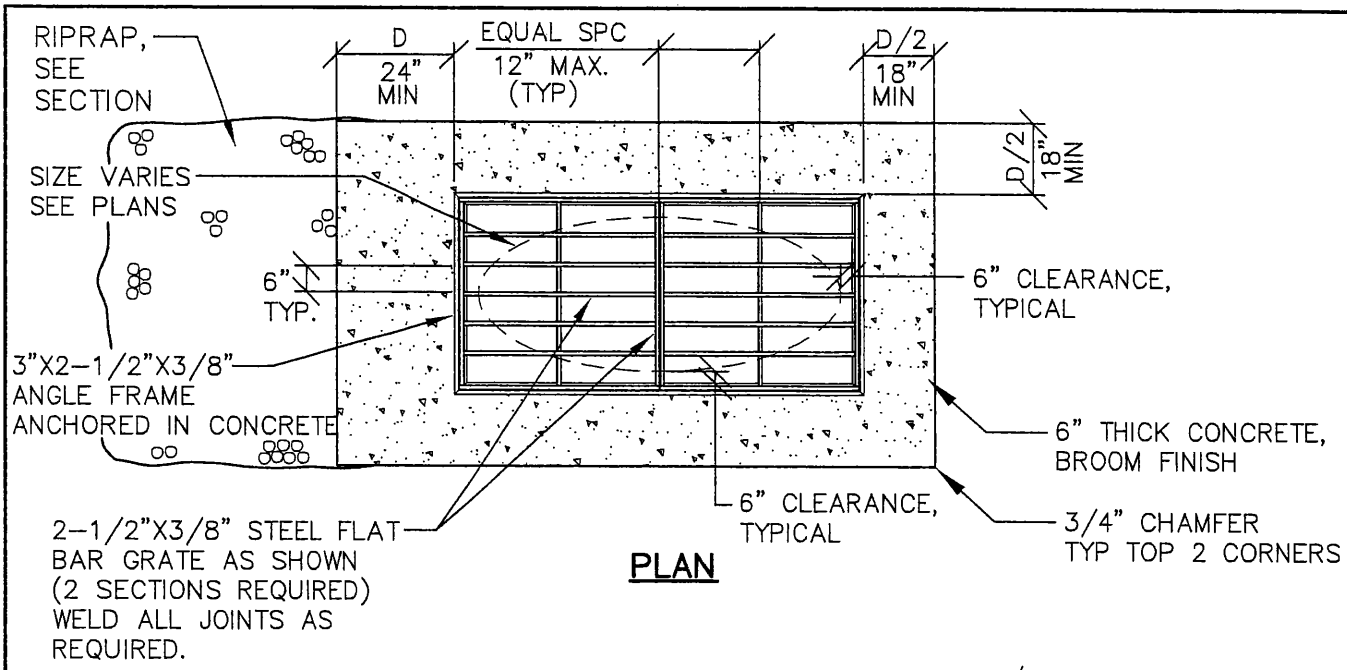

PLAN

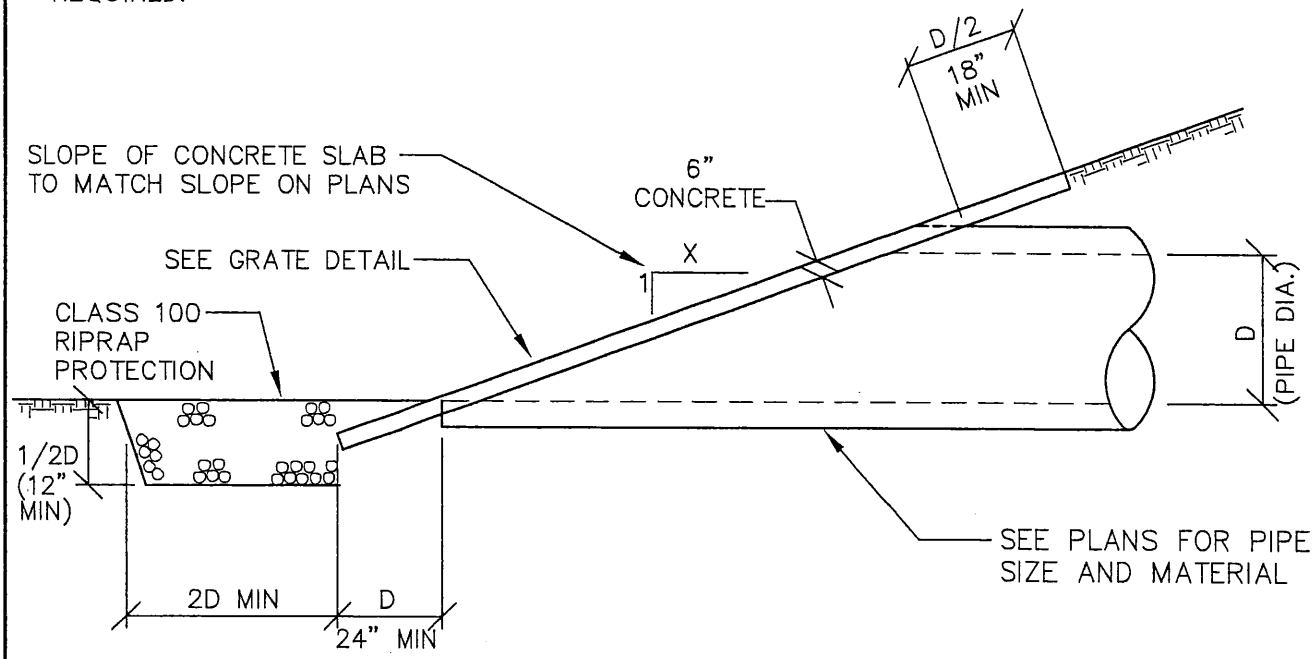

(NORMAL TO CL OF EMBANKMENT)

SECTION

NOTES:

1. SEE CONSTRUCTION DRAWINGS FOR PIPE SIZE, LOCATION AND INVERT ELEVATION.
2. FRAME AND GRATE SHALL BE ASTM A-36 STEEL, HOT DIP GALVANIZED AFTER CONSTRUCTION.
3. ALL CONCRETE TO BE 3300 PSI AT 28 DAYS.

LAST REVISION DATE: SEPT 2013	
CONCRETE PIPE END CAP WITH GRATE (NTS)	
MT ANGEL, OR	DETAIL NO. 362

STORM SEWER MANDREL TEST REPORT

Project Location: (City)	Project Name:
Inspector: (Print)	Date: (Separate Report Required for Each Test Session)
Mandrel Diameters Verified? Yes / No	

Station (& Manhole #)		Size & Material	Length (ft)	Results	Backfill Compaction Completed?	Date Sewer Flushed & Cleaned	Comments
From	To						
				Pass / Fail	Yes / No		
				Pass / Fail	Yes / No		
				Pass / Fail	Yes / No		
				Pass / Fail	Yes / No		
				Pass / Fail	Yes / No		
				Pass / Fail	Yes / No		
				Pass / Fail	Yes / No		
				Pass / Fail	Yes / No		
				Pass / Fail	Yes / No		
				Pass / Fail	Yes / No		
				Pass / Fail	Yes / No		

1. Mandrel testing shall conducted on a manhole to manhole (or cleanout) basis and shall be done after the line has been completely flushed out with water.

2. Mandrel testing shall be conducted after trench backfill and compaction has been completed.

3. The mandrel diameter shall be 95% of the pipe initial inside diameter. The inspector shall verify the diameter of each mandrel used during each test session.

Copyright 1996
Westech Engineering, Inc

NOTE: PER ORS 92.044(7), MANHOLE MUST BE SET 1' MINIMUM CLEAR FROM ANY SURVEY MONUMENT

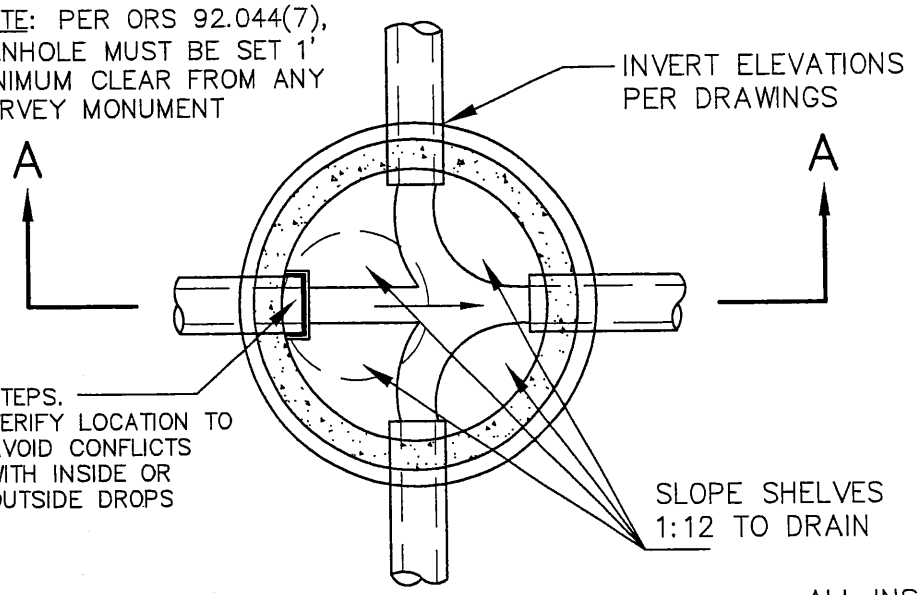

PLAN

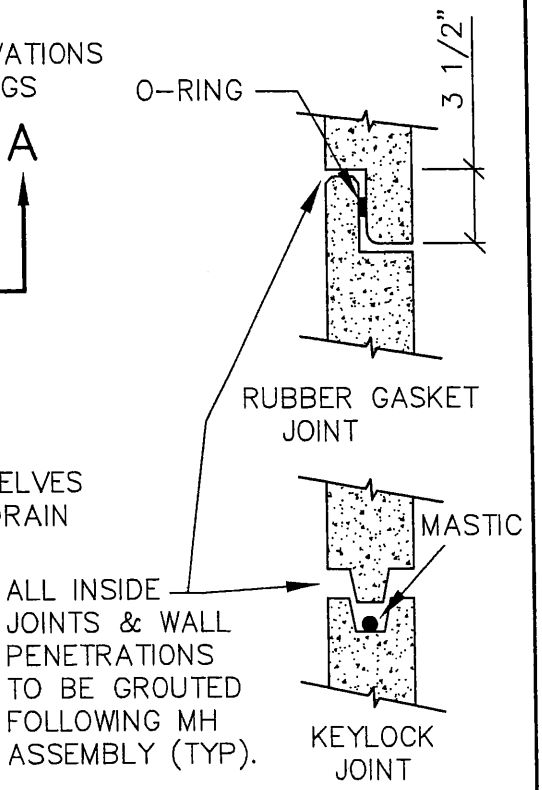

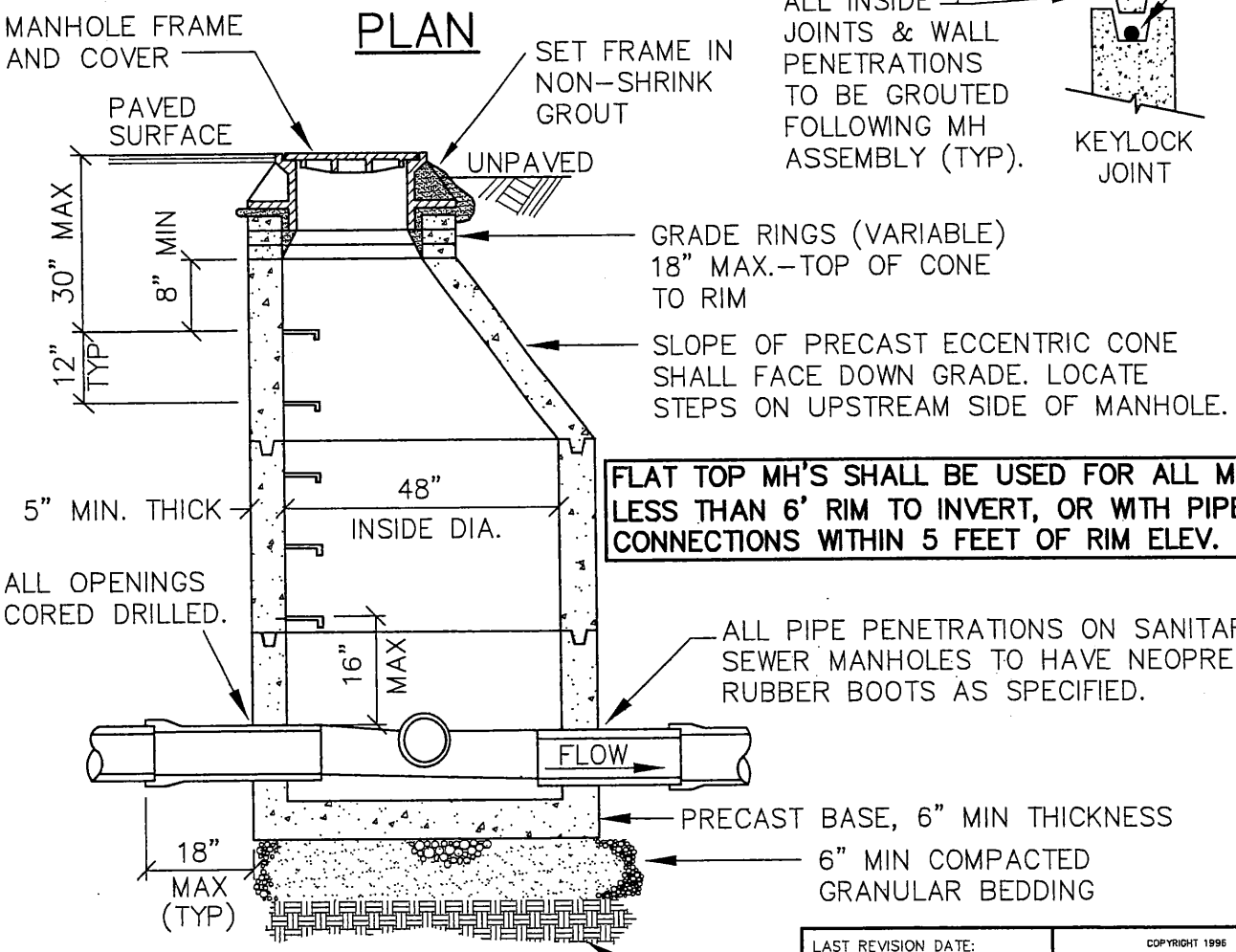

FLAT TOP MH'S SHALL BE USED FOR ALL MH'S LESS THAN 6' RIM TO INVERT, OR WITH PIPE CONNECTIONS WITHIN 5 FEET OF RIM ELEV.

SECTION A-A

NOTES:

1. PRECAST SECTIONS SHALL MEET OR EXCEED ASTM C-478.
2. WATERTIGHT O-RING OR MASTIC KEYLOCK JOINTS REQUIRED.
3. STEPS TO BE FACTORY INSTALLED POLYPROPYLENE PLASTIC WITH GRADE 60 REINFORCING ROD.

LAST REVISION DATE: SEPT 2013	COPYRIGHT 1996 WESTECH ENGINEERING, INC.
STANDARD MANHOLE FOR 21" PIPE AND SMALLER (NTS)	
MT ANGEL, OR	DETAIL NO. 401

NOTE: PER ORS 92.044(7), MANHOLE MUST BE SET 1' MINIMUM CLEAR FROM ANY SURVEY MONUMENT

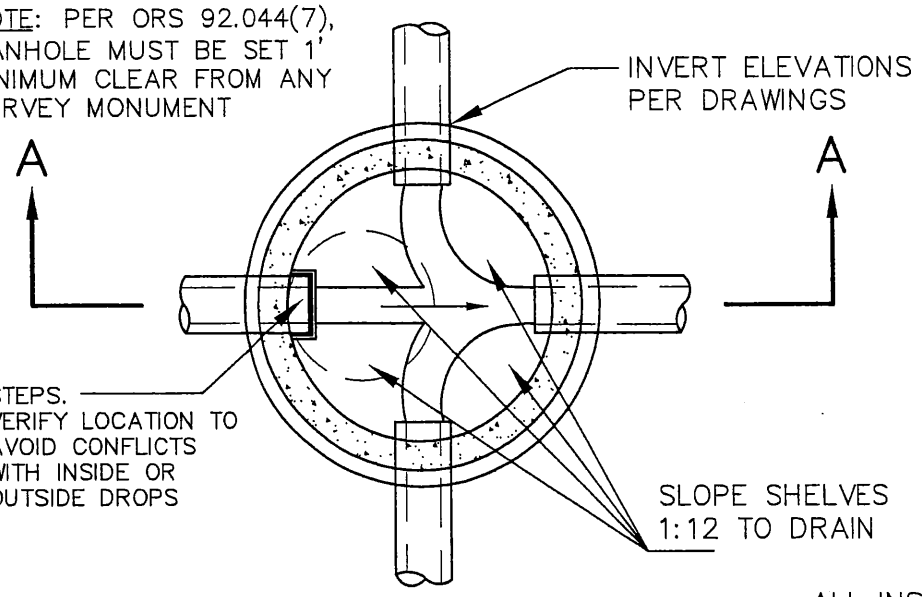

PLAN

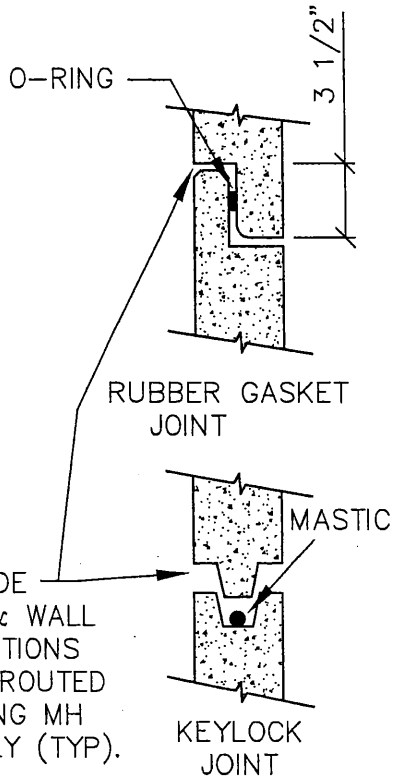

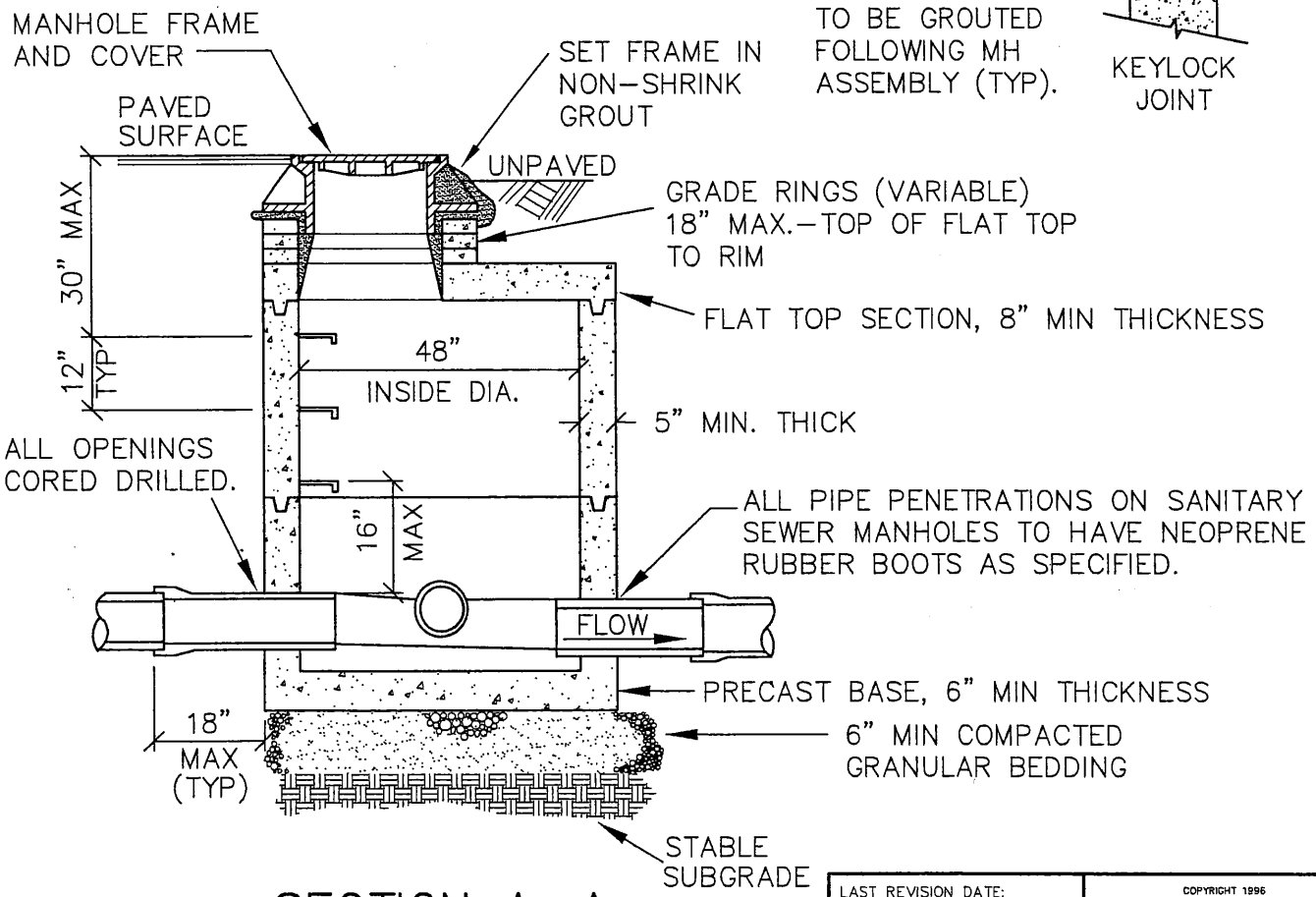

SECTION A-A

NOTES:

1. PRECAST SECTIONS SHALL MEET OR EXCEED ASTM C-478.
2. WATERTIGHT O-RING OR MASTIC KEYLOCK JOINTS REQUIRED.
3. STEPS TO BE FACTORY INSTALLED POLYPROPYLENE PLASTIC WITH GRADE 60 REINFORCING ROD.

LAST REVISION DATE: SEPT 2013	COPYRIGHT 1996 WESTECH ENGINEERING, INC.
FLAT TOP MANHOLE FOR 21" PIPE AND SMALLER (NTS)	
MT ANGEL, OR	DETAIL NO. 402

NOTE: PER ORS 92.044(7), MANHOLE MUST BE SET 1' MINIMUM CLEAR FROM ANY SURVEY MONUMENT

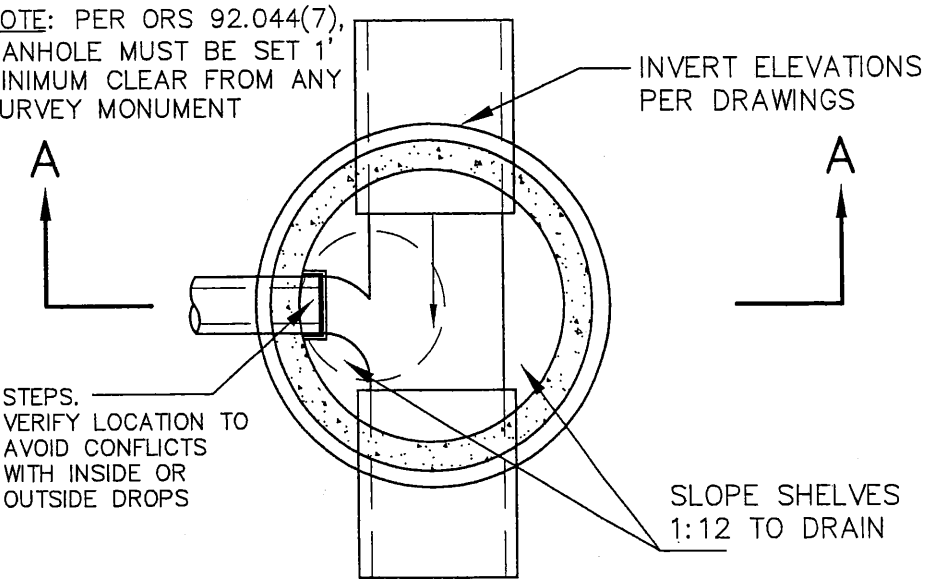

PLAN

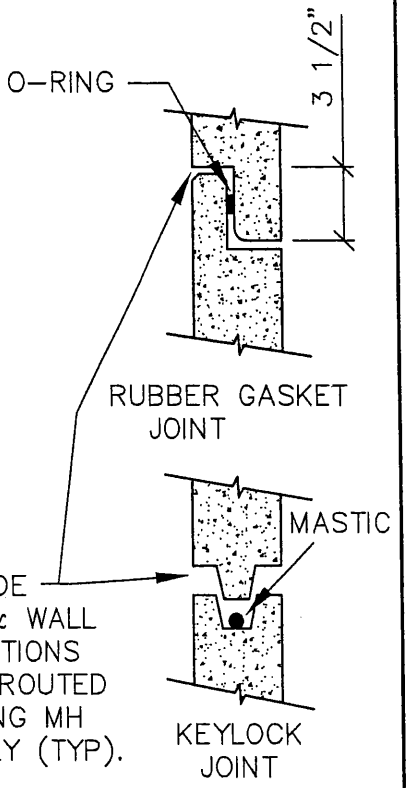

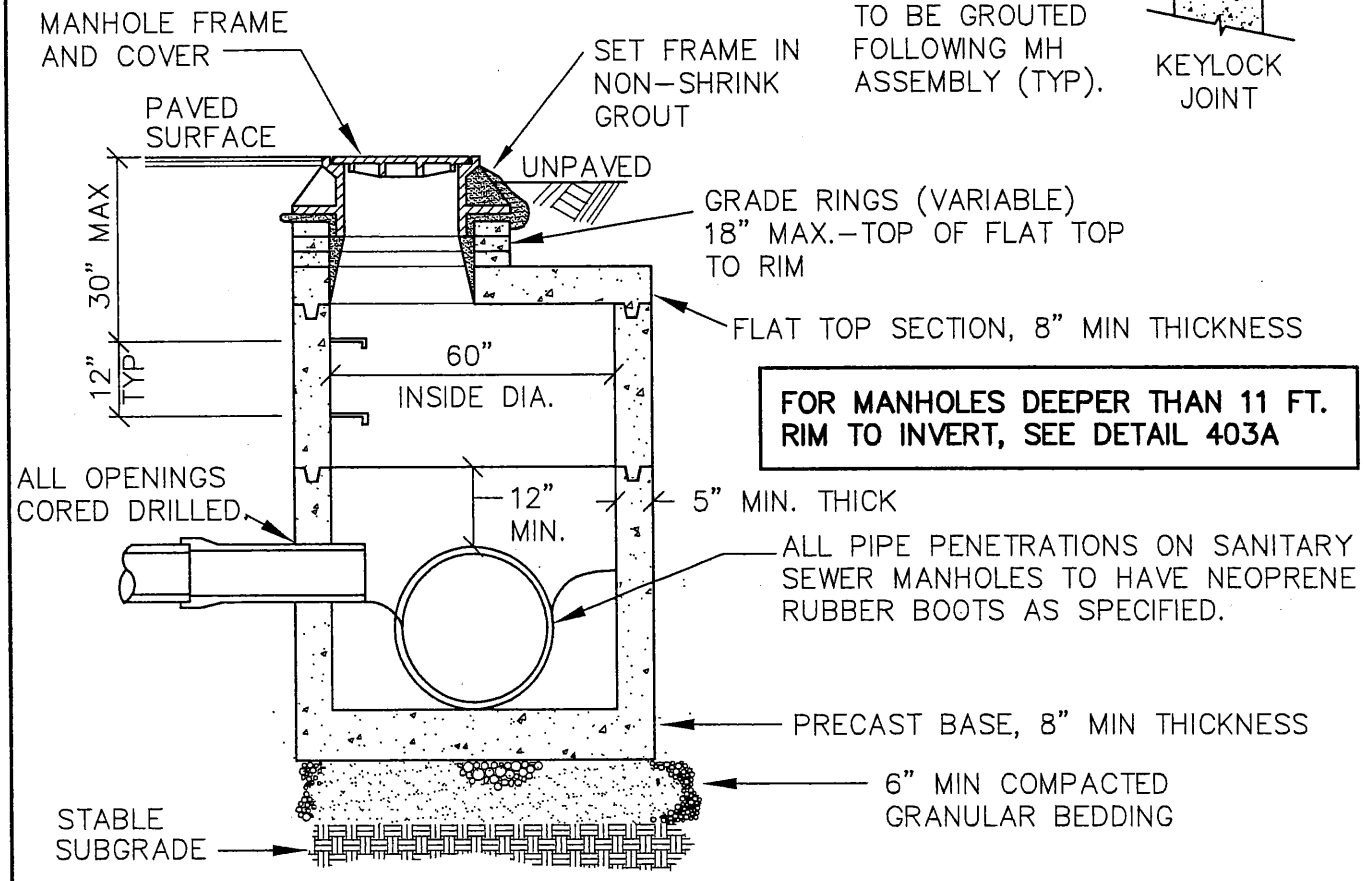

SECTION A-A

NOTES:

1. PRECAST SECTIONS SHALL MEET OR EXCEED ASTM C-478.
2. WATERTIGHT O-RING OR MASTIC KEYLOCK JOINTS REQUIRED.
3. STEPS TO BE FACTORY INSTALLED POLYPROPYLENE PLASTIC WITH GRADE 60 REINFORCING ROD.

LAST REVISION DATE: SEPT 2013	COPYRIGHT 1996 WESTECH ENGINEERING, INC.
MANHOLE FOR 24" AND 27" PIPE (NTS)	
MT ANGEL, OR	DETAIL NO. 403

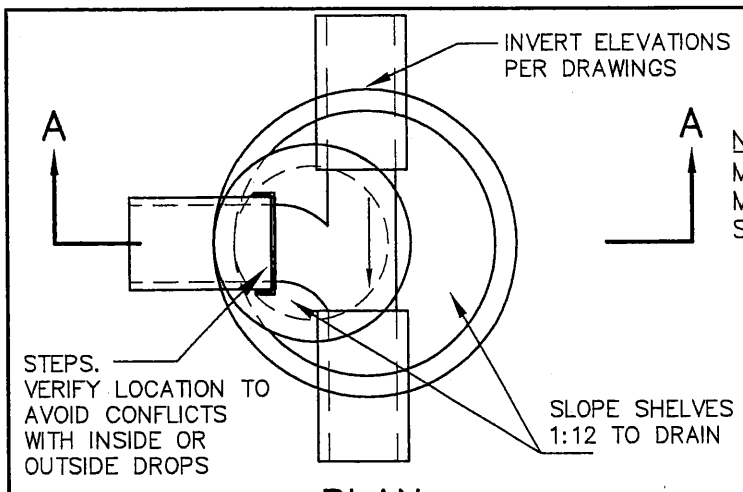

PLAN

NOTE: PER ORS 92.044(7), MANHOLE MUST BE SET 1' MINIMUM CLEAR FROM ANY SURVEY MONUMENT.

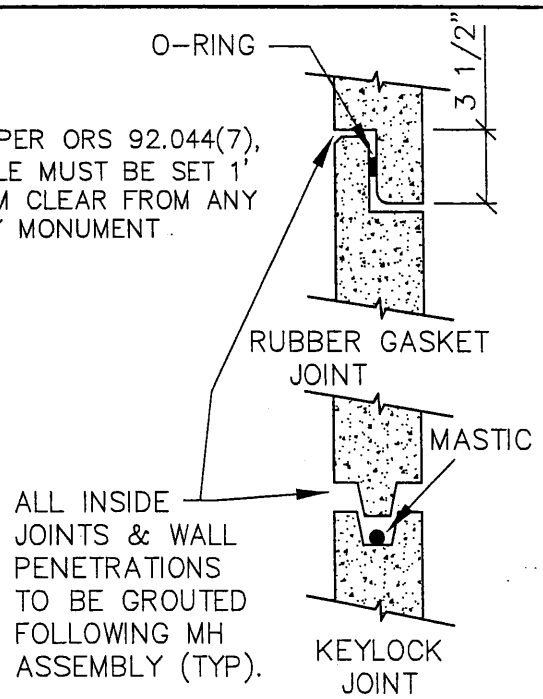

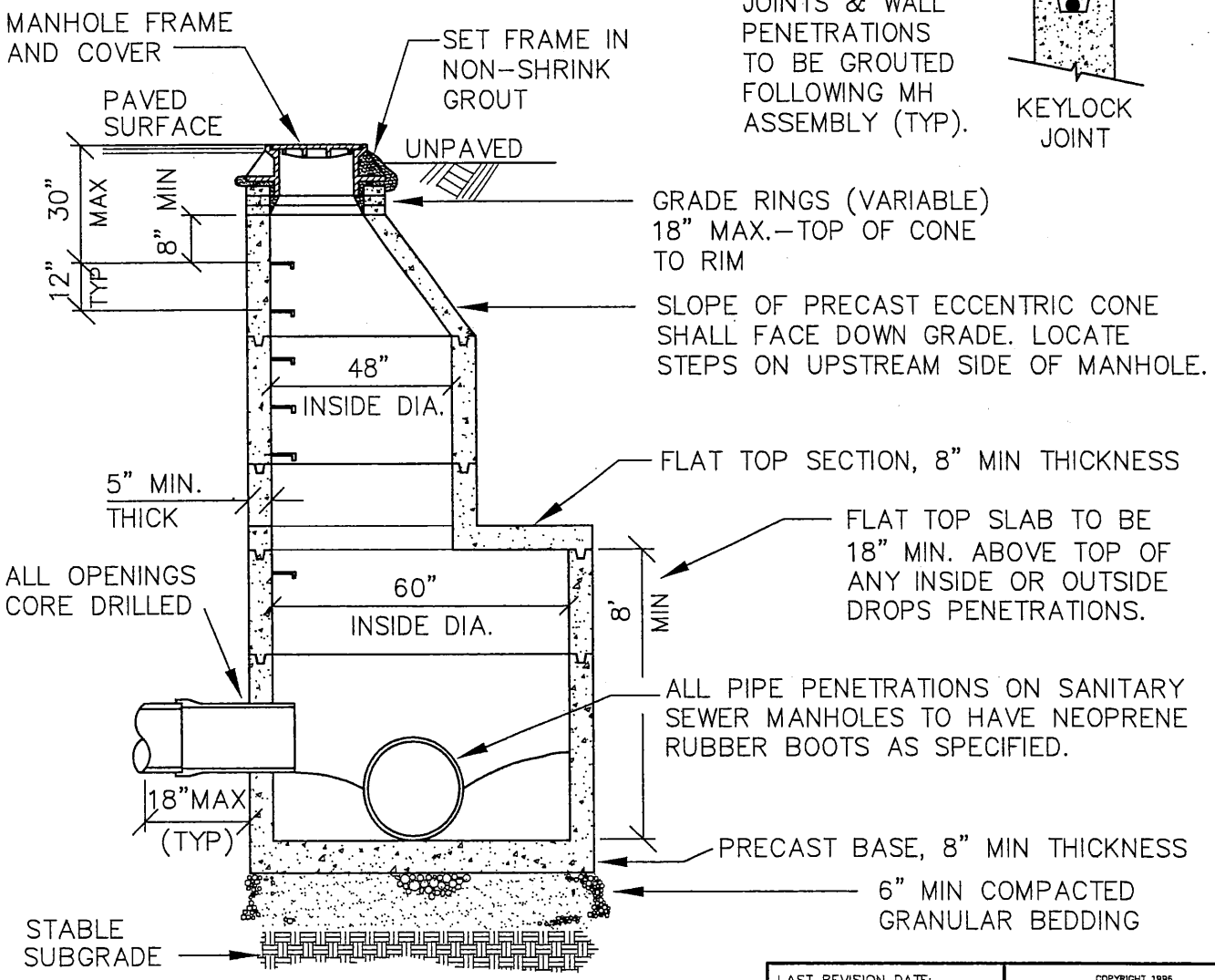

SECTION A-A

NOTES:

1. PRECAST SECTIONS SHALL MEET OR EXCEED ASTM C-478.
2. WATERTIGHT O-RING OR MASTIC KEYLOCK JOINTS REQUIRED.
3. STEPS TO BE FACTORY INSTALLED POLYPROPYLENE PLASTIC WITH GRADE 60 REINFORCING ROD.

LAST REVISION DATE: SEPT 2013	COPYRIGHT 1996 WESTECH ENGINEERING, INC.
DEEP MANHOLE FOR 24" AND 27" PIPE (NTS)	
MT ANGEL, OR	DETAIL NO. 403A

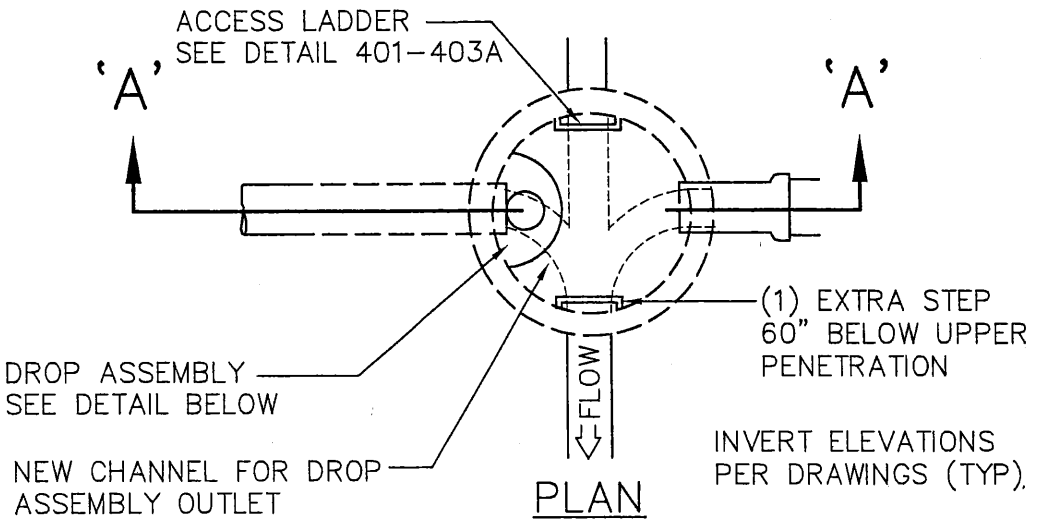

PLAN

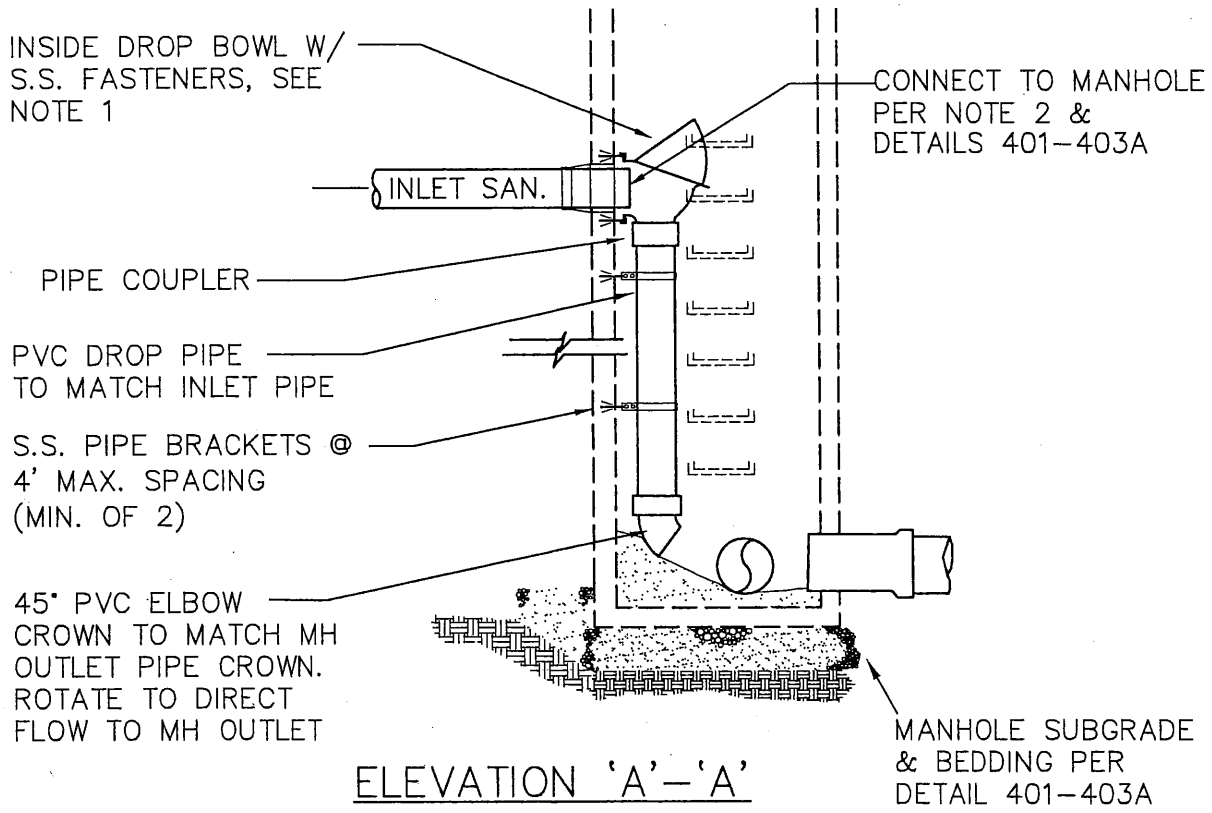

ELEVATION 'A'-'A'

NOTES:

1. ALL INSIDE DROPS MUST BE APPROVED ON A CASE BY CASE BASIS BY THE PUBLIC WORKS SUPERINTENDANT. MINIMUM 60" DIAMETER MANHOLE REQUIRED FOR INSIDE DROPS UNLESS OTHERWISE APPROVED IN WRITING BY THE PUBLIC WORKS SUPERINTENDANT.
2. "RELINER" INSIDE DROP BOWL BY DURAN, INC. OR APPROVED EQUIVALENT. FOR INLET PIPES WITH SLOPES GREATER THAN 5%, PROVIDE BOWL WITH OPTIONAL HOOD.
3. ALL PIPE PENETRATIONS SHALL HAVE NEOPRENE RUBBER BOOTS. MANHOLE BASE, BARREL & TOP TO CONFORM WITH DETAILS 401-403A.

LAST REVISION DATE: SEPT 2013	
NSIDE DROP CONNECTION FOR SANITARY SEWER MANHOLE (NTS)	
MT ANGEL, OR	DETAIL NO. 404

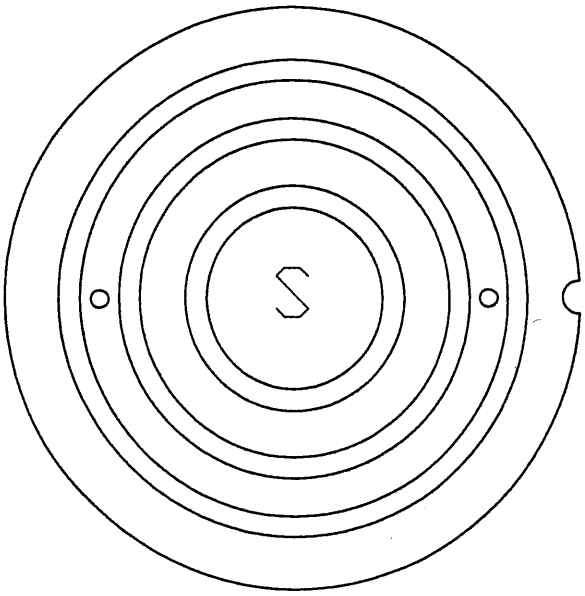

SANITARY

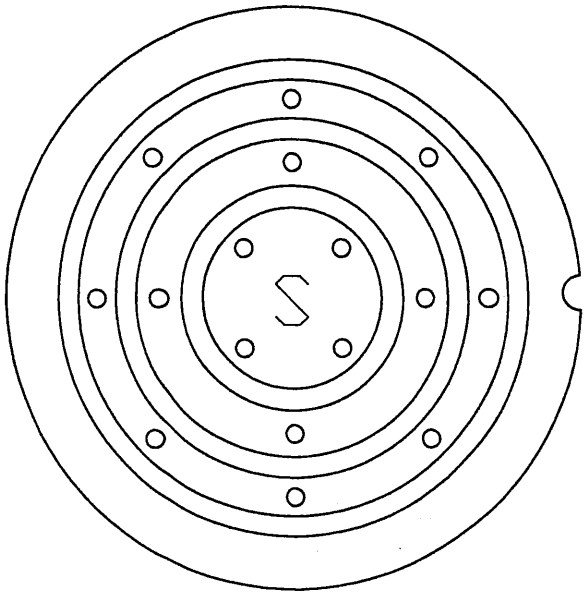

STORM

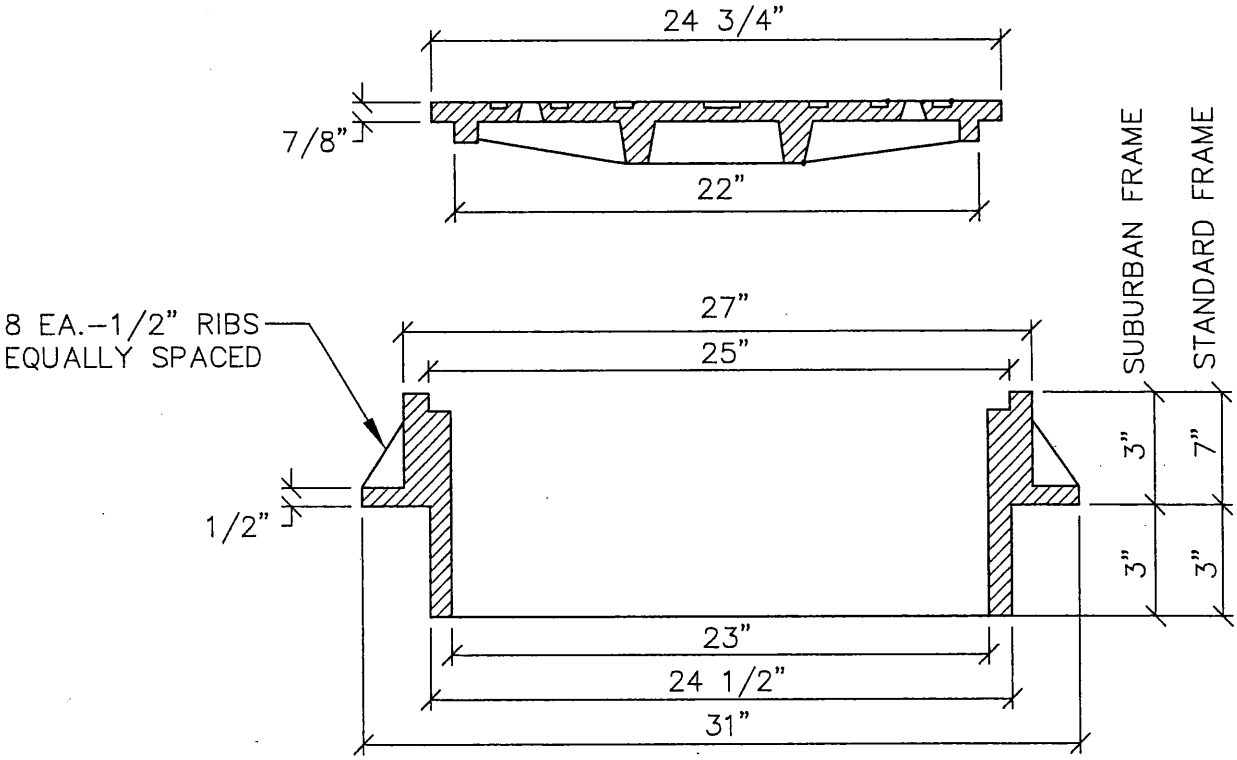

NOTES:

1. COVER AND FRAME SHALL BE GRAY CAST IRON ASTM A–48, CLASS 30.
2. COVER AND FRAME TO BE MACHINED TO A TRUE BEARING ALL AROUND.
3. NOTCH LID FOR LIFTING HOOK.

LAST REVISION DATE: OCTOBER 1997	
MANHOLE FRAME AND COVER (STANDARD AND SUBURBAN) (NTS)	
MT ANGEL, OR	DETAIL NO. 405

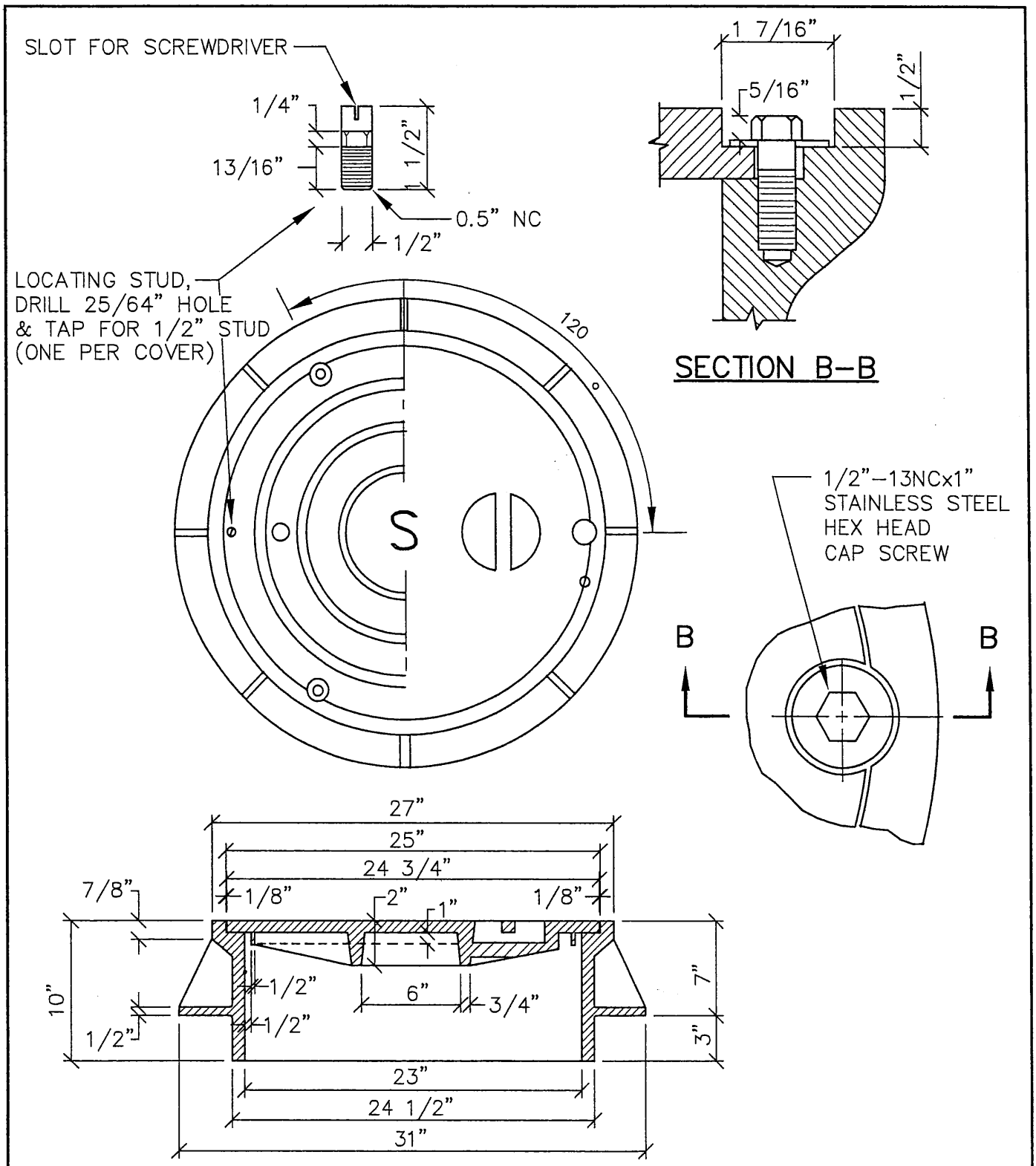

NOTES:

1. COVER AND FRAME TO BE MACHINED TO A TRUE BEARING ALL AROUND.
2. MATERIAL SHALL BE OF GRAY CAST IRON ASTM A–48, CLASS 30.

LAST REVISION DATE: SEPTEMBER 1996	
LOCKDOWN MANHOLE FRAME AND COVER (NTS)	
MT ANGEL, OR	DETAIL NO. 406

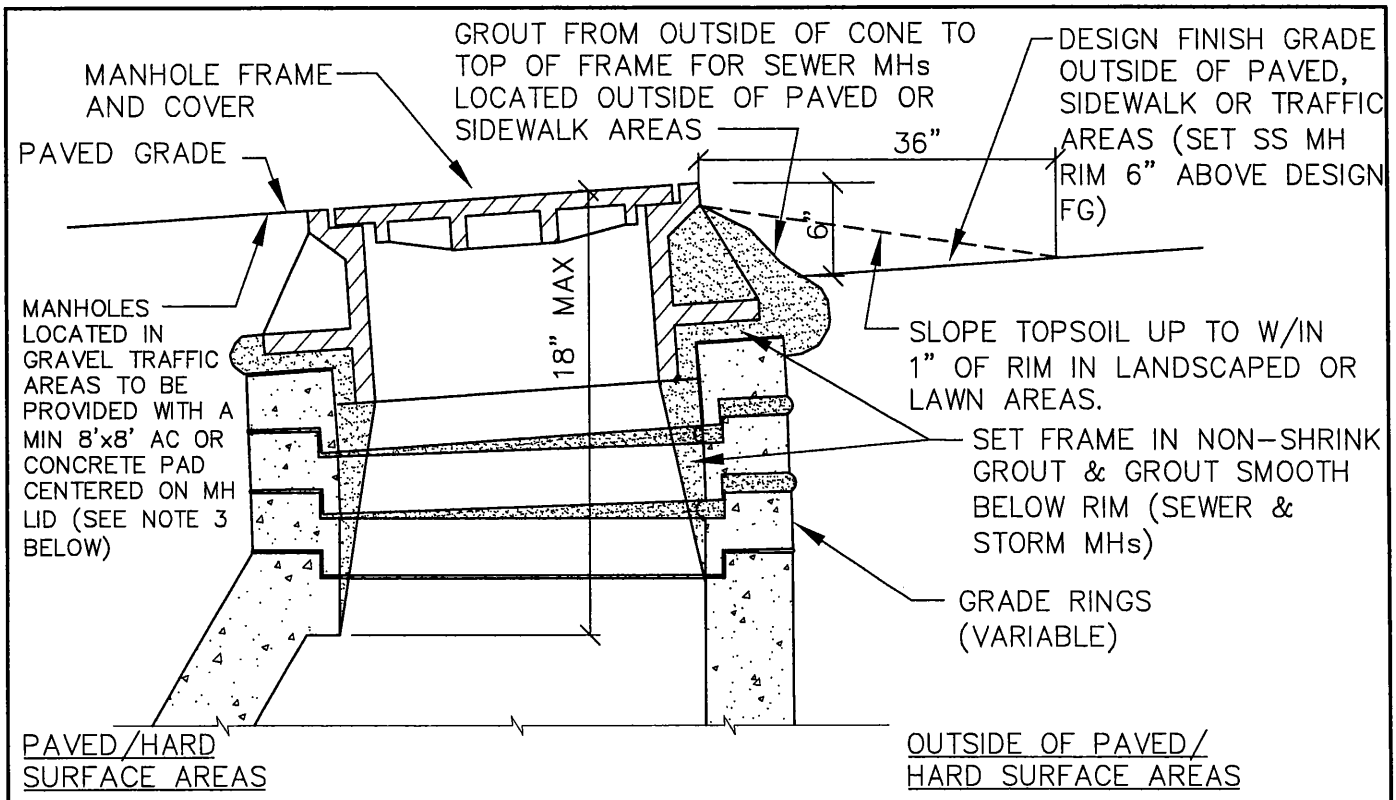

TYPICAL MANHOLE GRADE ADJUSTMENT

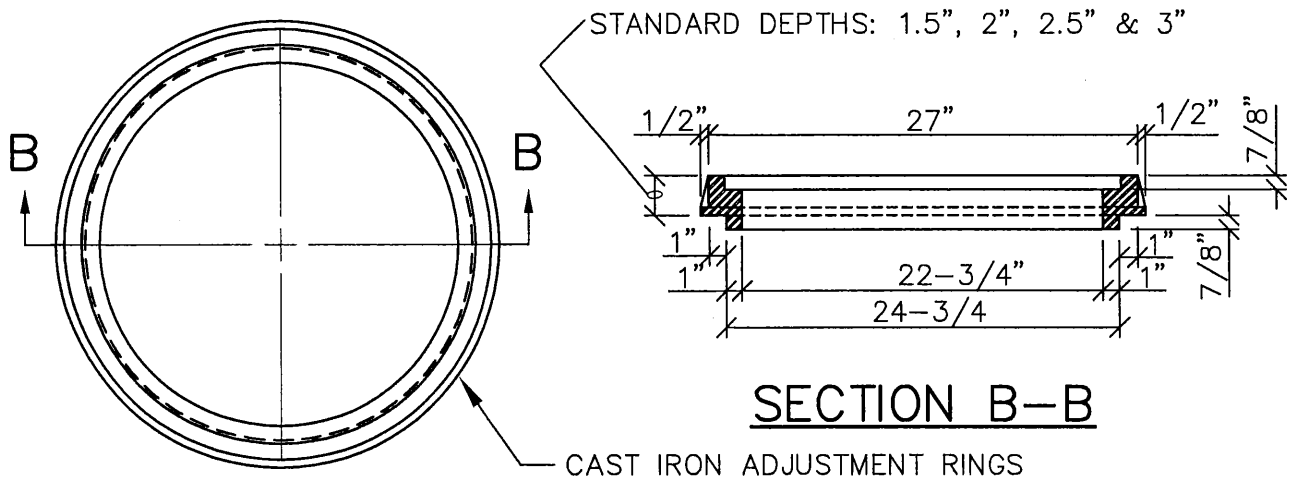

SECTION B-B

MANHOLE ADJUSTMENT RINGS FOR RESURFACING ONLY

NOTES:

1. CAST IRON ADJUSTMENT RINGS ALLOWED ONLY WITH OVERLAYS AND NOT ON NEW MANHOLES. MAXIMUM 1 ADJUSTMENT RING PER MANHOLE.
2. SANITARY SEWER – 2 HOLE LIDS
   STORM DRAINS – 16 HOLE LIDS
3. MH PADS IN UNPAVED AREAS TO BE (A) MIN OF 3" AC OVER 10" COMPACTED BASEROCK (OR PUBLIC ROAD STANDARD THICKNESS IF LOCATED IN R.O.W), OR (B) 8" CONCRETE OVER 2" BACKROCK.

LAST REVISION DATE: NOV 2013	JO #
MANHOLE RIM ADJUSTMENT DETAILS (NTS)	
MT ANGEL, OR	DETAIL NO. 407

CLEANOUT COVERS: ALL SEWER CLEANOUT LIDS TO READ "SEWER"
ALL STORM CLEANOUT LIDS TO READ "STORM" OR "C/O".

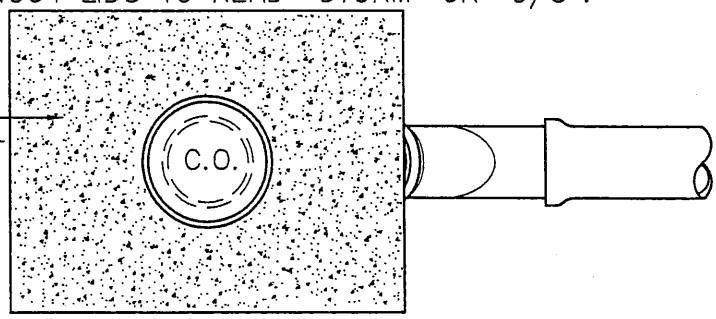

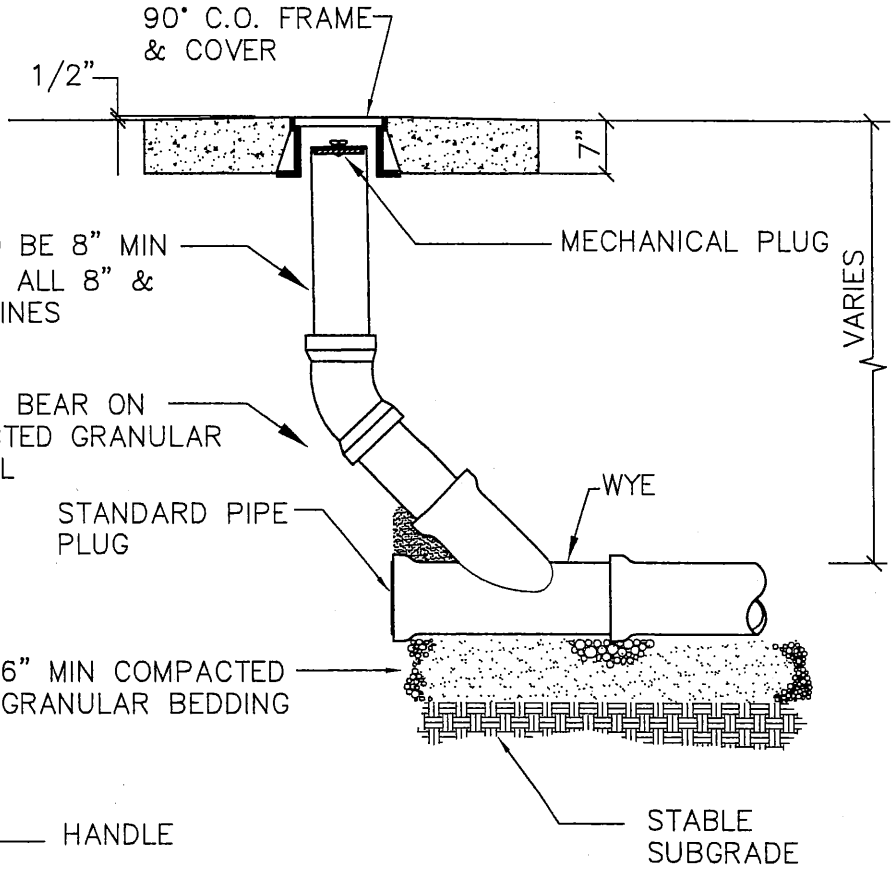

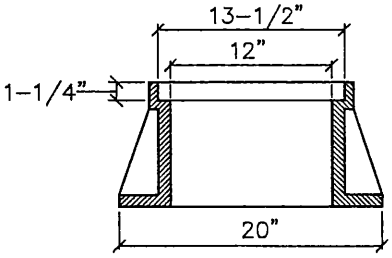

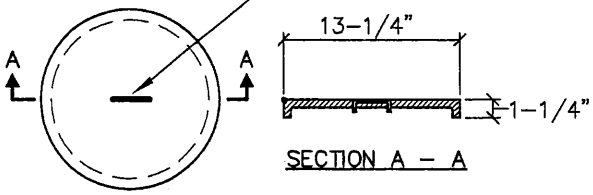

CLEANOUT FRAME & COVER

NOTES:

1. USE INLAND FOUNDRY MODEL 240 FRAME & COVER IN ALL AREAS.
2. COVER AND FRAME SHALL BE GRAY CAST IRON ASTM A-48, CLASS 30.
3. COVER AND FRAME TO BE MACHINED TO A TRUE BEARING ALL AROUND.

LAST REVISION DATE: SEPT 2013	COPYRIGHT 1996 WESTECH ENGINEERING, INC.
MAINLINE CLEANOUT (NTS)	
MT ANGEL, OR	DETAIL NO. 411

NOTE: NO VERTICAL OR HORIZONTAL BENDS GREATER THAN 22-1/2° WITHIN RIGHT-OF-WAY OR PUBLIC UTILITY EASEMENT (IE. FROM MAINLINE TO CLEANOUT).

NOTE: PER ORS 92.044(7), SERVICE LINES MUST BE SET 1' MINIMUM CLEAR FROM ANY SURVEY MONUMENT

PRESSURE TREATED 2" X 4" WIRED TO INVERT AND EXTENDING ABOVE FINISH GRADE. STAKE SHALL BE CONTINUOUS AND REMAIN VERTICAL AFTER BACKFILLING. END SHALL BE PAINTED & LABELED (WHITE FOR SEWER) (GREEN FOR STORM), AND LABELED WITH DEPTH TO PIPE. EXTEND TONING WIRE TO SURFACE.

STAMP 2" TALL "S" OR "D" IN TOP OF CURB & GUTTER PAN AT POINT OF CROSSING.

NOTES:

1. MIN. 18" SEPARATION BETWEEN ADJACENT LATERALS.
2. ONE FULL LENGTH OF PVC PIPE (AT CROSSING) REQUIRED FOR ALL SEWER LATERALS WHICH CROSS UNDER WATER LINES WITH LESS THAN 18" MINIMUM VERTICAL CLEARANCE BETWEEN WATER LINE AND SERVICE LATERAL.
3. SERVICE SHALL NOT BE BACKFILLED PRIOR TO INSPECTION BY PUBLIC WORKS.
4. INSTALL A CONTINUOUS 12 GUAGE SOLID CORE GREEN INSULATED TRACER WIRE FROM MAINLINE WIRE TO END OF LATERAL.

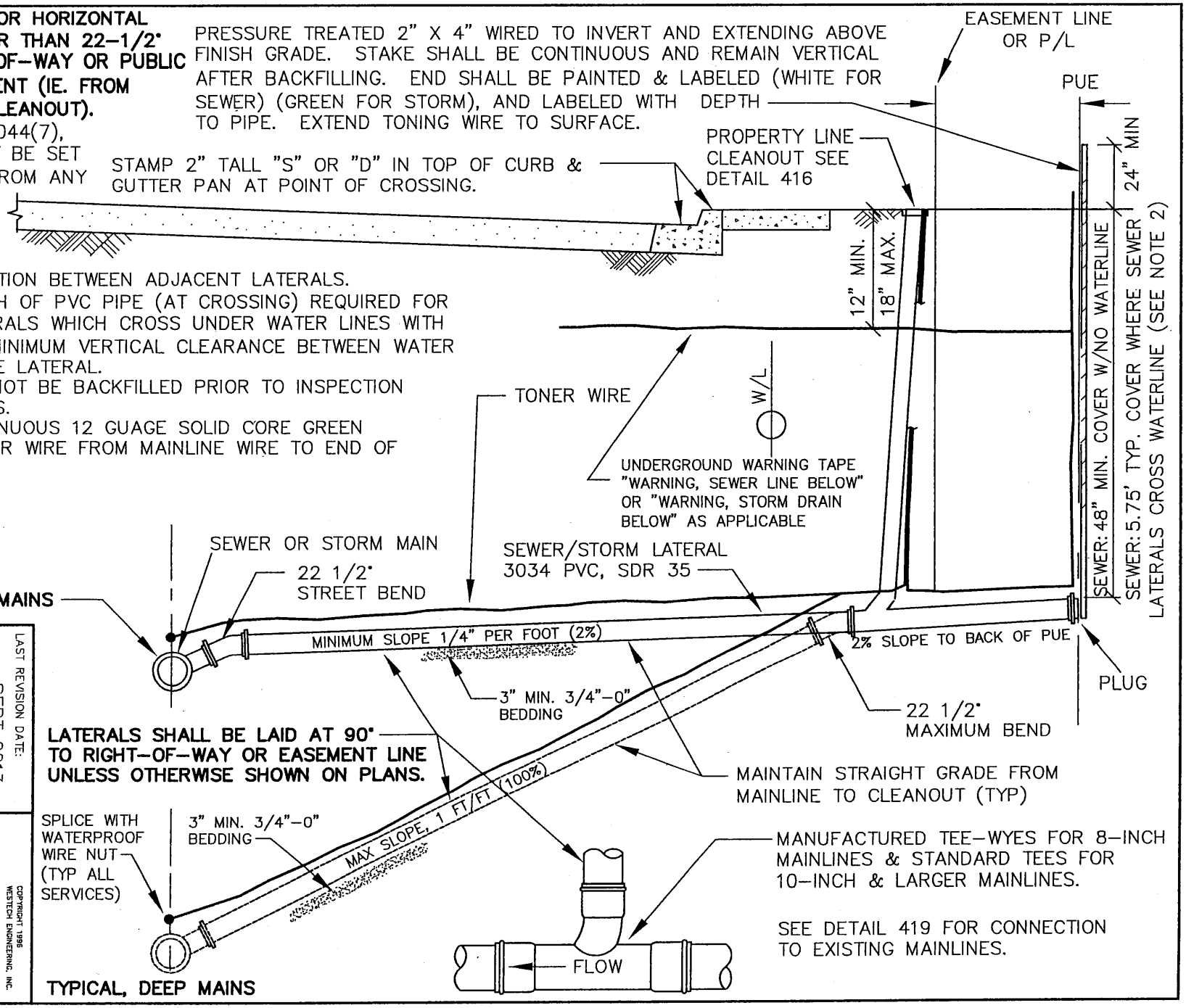

MT ANGEL, OR	SEWER AND STORM SERVICE LATERALS (NTS)	LAST REVISION DATE: SEPT 2013
DETAIL NO. 415		COPYRIGHT 1996 WESTECH ENGINEERING, INC.

CLEANOUT COVERS: ALL SEWER CLEANOUT LIDS TO READ "SEWER"
ALL STORM CLEANOUT LIDS TO READ "STORM" OR "C/O".

1. NON-TRAFFIC AREAS:
   CARSON MODEL 910 T-COVER OR EQUAL (GREEN FOR SEWER, GREY FOR STORM).
2. TRAFFIC AREAS, INCLUDING DRIVEWAYS:
   8" X 4" CAST IRON FRAME & COVER, OLYMPIC M1007 OR EQUAL.
   (CI CLEANOUTS IN UNPAVED AREAS, SET IN 12" CONCRETE PAD)

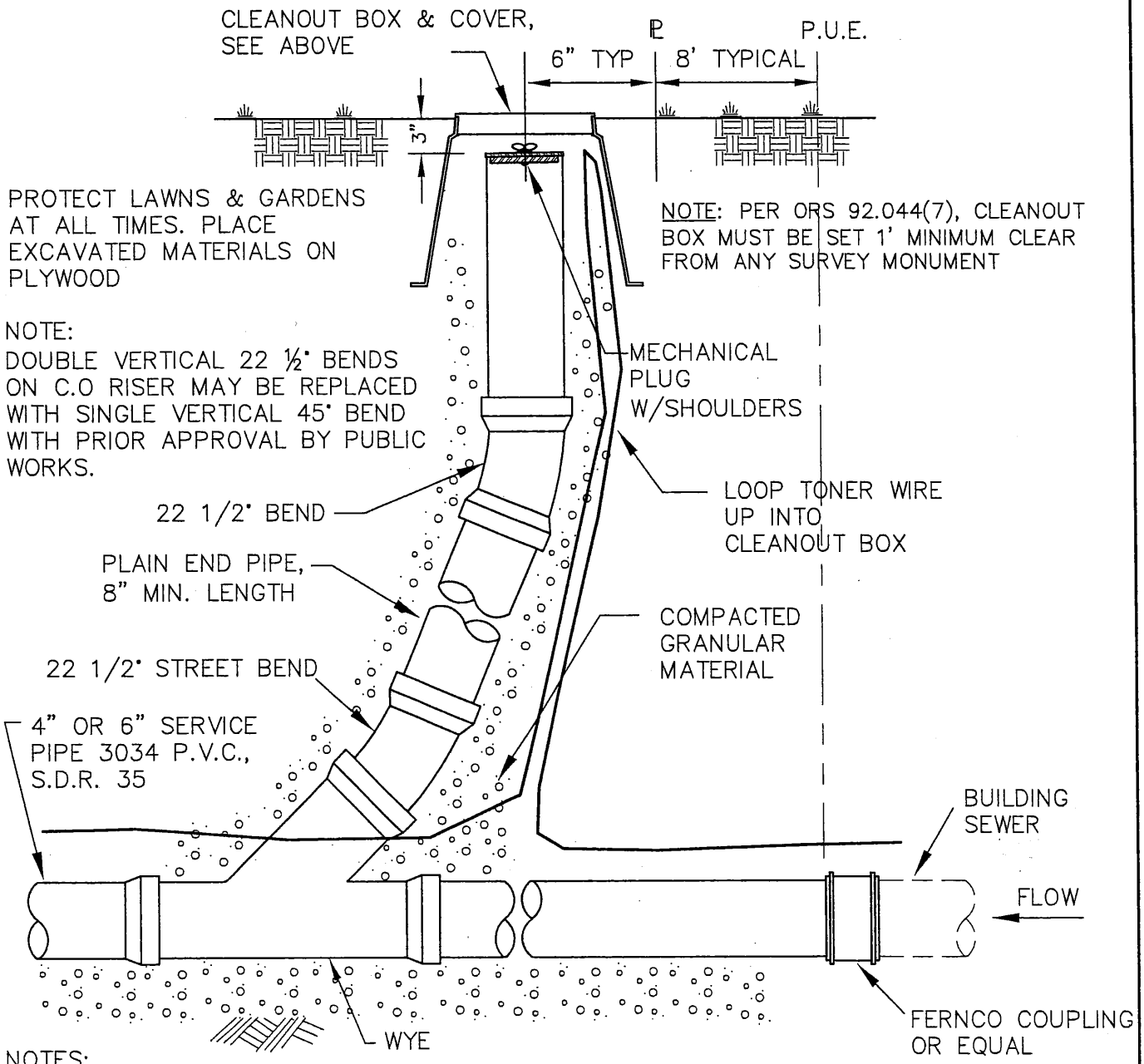

NOTES:

1. CLEANOUT RISER SHALL BE SAME SIZE AND MATERIAL AS LATERAL PIPE.
2. PROVIDE CASTING FOR CLEANOUTS LOCATED IN DRIVEWAYS.
3. CLEANOUT PIPE SHALL BE LEFT A MINIMUM OF 18" ABOVE EXISTING GRADE UNTIL ALL CURBING IS INSTALLED AND ALL PRIVATE UTILITY TRENCHES ARE BACKFILLED. CLEANOUTS SHALL THEN BE SET FLUSH WITH FINISH GRADE.

LAST REVISION DATE: SEPT 2013	COPYRIGHT 1996 WESTECH ENGINEERING, INC.
STANDARD SERVICE LATERAL CLEANOUT (NTS)	
MT ANGEL, OR	DETAIL NO. 416

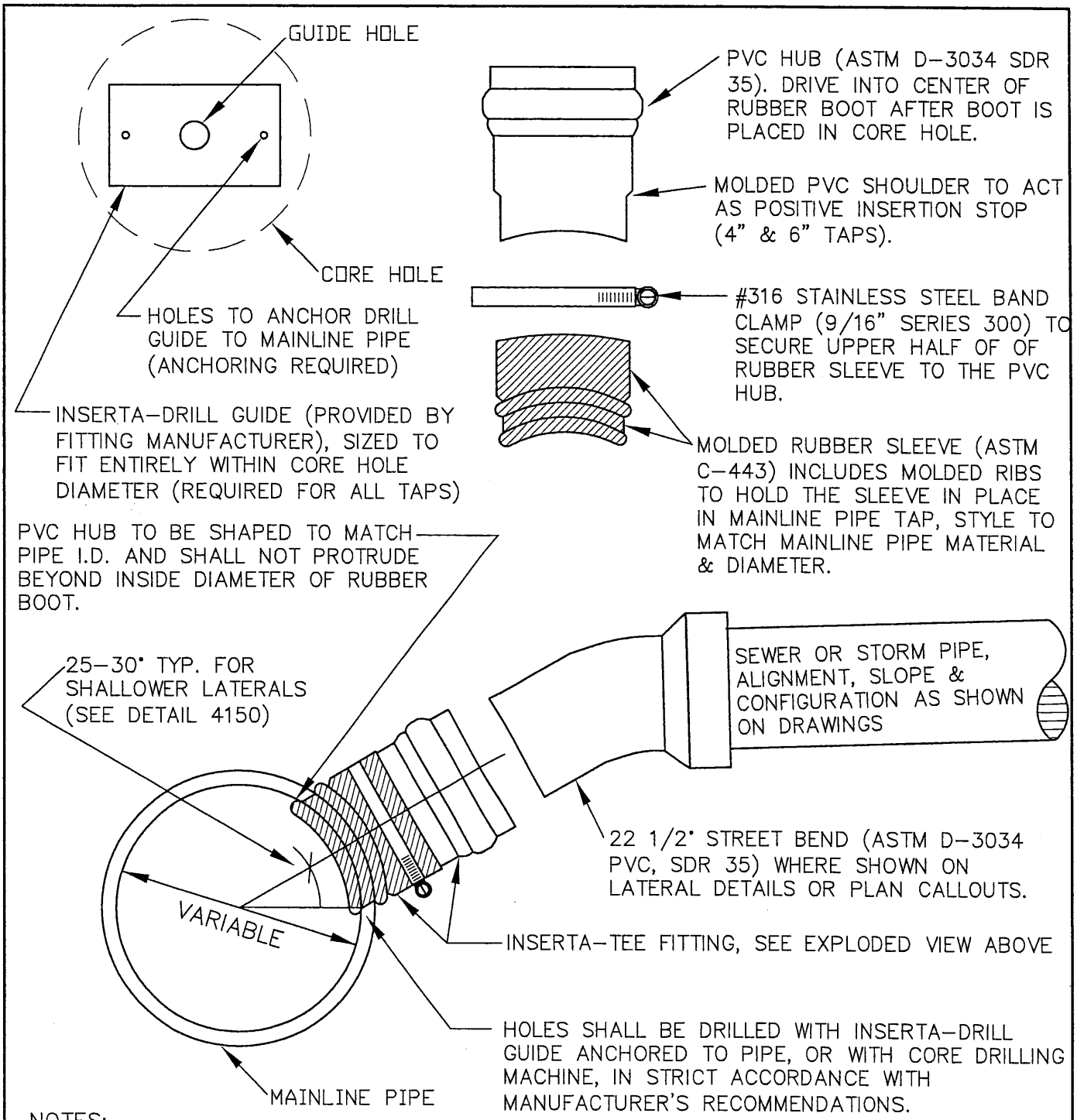

NOTES:

1. SANITARY SEWERS – INSERTA-TEES ALLOWED ON EXISTING PVC OR DUCTILE IRON SEWER MAINS. USE ON OTHER PIPE TYPES IS SUBJECT TO CITY APPROVAL AND ACCEPTABLE PIPE CONDITION. MANUFACTURED TEE-WYE FITTINGS SHALL BE USED ON ALL NEW SEWER MAINLINES.
2. STORM DRAINS – INSERTA-TEES ALLOWED ON ALL PIPE TYPES, SUBJECT TO CITY APPROVAL AND ACCEPTABLE PIPE CONDITION.
3. THE TAP SHALL NOT BE MADE EXCEPT IN THE PRESENCE OF A CITY INSPECTOR; NOR SHALL ANY CONNECTION BE MADE WITHOUT CITY APPROVAL.
4. CENTERLINE OF TAP SHALL BE ABOVE SPRINGLINE.

INSERTA-TEE "FATBOY" FITTING SHALL BE USED FOR ALL 4" & 6" TAPS, IN ORDER TO ALLOW 95% MANDREL TESTING OF MAINLINES.

LAST REVISION DATE: SEPT 2013	JO # STANDARD
INSERTA-TEE CONNECTION TO EXISTING SEWER OR STORM DRAIN (NTS)	
MT ANGEL, OR	DETAIL NO. 419

MANHOLE VACUUM TEST REPORT

Project Location: (City)	Project Name:
Inspector: (Print)	Date: (Separate Report Required for Each Test Session)
Testing Company: (Name & Phone #)	

Manhole No.	Manhole Diameter (inch)	Manhole Depth (ft)	Surface Restoration Complete?	Time Required[3] (sec)	Time to Drop from 10" Hg to 9" Hg (sec)	Results	Comments
			Yes / No			Pass / Fail	
			Yes / No			Pass / Fail	
			Yes / No			Pass / Fail	
			Yes / No			Pass / Fail	
			Yes / No			Pass / Fail	
			Yes / No			Pass / Fail	
			Yes / No			Pass / Fail	
			Yes / No			Pass / Fail	
			Yes / No			Pass / Fail	

1. All adjacent surface restoration shall be completed prior to conducting manhole acceptance tests, including finish paving and final adjustments to grade. Any test conducted prior to completion of surface restoration shall be considered informal, and will not count for acceptance.

2. The vacuum test head seal shall be inflated in accordance with the manufacturer's recommendations, but in all cases the grade rings and casting shall be included in the test. A vacuum of 10-inches of mercury shall be drawn and the vacuum pump shut off. With the valves closed, the time shall be measured for the vacuum to drop to 9-inches.

3. The manhole shall pass if the time for the vacuum reading to drop to 9-inches meets or exceeds the values indicated on the following table. Times for deeper depths as required by the City Engineer.

REQUIRED MANHOLE VACUUM TEST TIMES

Manhole Depth (feet)	Required Time (sec)		
	48-inch diameter	60-inch diameter	72-inch diameter
8	20	26	33
10	25	33	41
12	30	39	49
14	35	46	57
18	40	52	65
20	45	59	73
22	50	65	81

Copyright 1996
Westech Engineering, Inc

SANITARY SEWER AIR TEST REPORT

Project Location:	Project Name:
Inspector: (Print)	Date: (Separate Report Required for Each Test Session)
TV Inspection Required? Yes / No	Mandrel Testing Completed? Date Completed or Scheduled:

Station (& Manhole #)		Main/ Lateral	Size & Material	Total Length (ft)	C[1]	K[1]	Test Time (Seconds) for Pressure Drop Shown (psi)			Comments
From	To						Required[2]	4.0 - 3.5	3.5 - 2.5	
		Main								Pass / Fail
		Laterals								
		Totals								
		Main								Pass / Fail
		Laterals								
		Totals								
		Main								Pass / Fail
		Laterals								
		Totals								
		Main								Pass / Fail
		Laterals								
		Totals								

[1] For C and K values, see table and formulas on reverse side.
[2] For total C ≤ 1.0, test time (seconds) required = 2 times K
For total C > 1.0, test time (seconds) required = 2 times (K/C)

TEST PROCEDURE

1. Add air slowly to the portion of the pipe installation under test until the internal air pressure is raised to 4.0 psig (or higher pressure as required to address groundwater). *Increase the test pressure by 0.433 psi for each foot of average ground water depth over the exterior crown of the pipe under test, with the maximum test pressure not to exceed 9.0 psi.*
2. Add air slowly until the internal air pressure is raised to 4.0 psig (or higher pressure as required due to groundwater).
3. After required test pressure is reached, allow 2-minutes minimum for air temperature to stabilize, adding only the amount of air required to maintain pressure.
4. After the temperature stabilization period, disconnect the air supply.
5. Record the time required for the internal air pressure to drop from 3.5 psi (or higher as required due to groundwater backpressure) to 2.5 psi (or higher as required due to groundwater backpressure). If this time exceeds the required time (or if there is less than 1.0 psi pressure drop), the test is successful.

ACCEPTANCE: The tested sewer section shall be considered acceptable if the pressure drop during the test time is less than 1.0 psi from the starting pressure.

Copyright 1996
Westech Engineering, Inc

SEWER AIR TEST C AND K VALUES

Pipe Size (inch)	C-Value[1] per foot length	K-Value[2] per foot length
4	0.00155	0.176
6	0.00233	0.396
8	0.00311	0.704
10	0.00388	1.100
12	0.00466	1.584
15	0.00582	2.475
18	0.00699	3.564
21	0.00815	4.851

[1] $C = 0.0003882dL$ Where d = diameter (inches)
[2] $K = 0.011d^2L$ L = Length (ft)

Example:

Air Test a system consisting of two mainline segments as follows:
Segment 1: 395 feet of 8-inch mainline, 100 feet of 4-inch laterals, and 35 feet of 6 inch laterals.
Segment 2: 200 feet of 8-inch mainline, 30 feet of 4-inch laterals, and 20 feet of 6 inch laterals.

Station (& Manhole #)		Main/ Lateral	Size & Material	Total Length (ft)	C[1]	K[1]	Test Time (Seconds) for Pressure Drop Shown (psi)			Comments
From	To						Required[2]	4.0 - 3.5	3.5 - 2.5	
0+00 MH A1	3+95 MH A2	Main	8" PVC	395	1.2285	278.1	310/1.46= 212			Pass / Fail
		Laterals	4" PVC 6" PVC	100 35	0.155 0.01855	17.6 13.86	212*2= 414 sec			
		Totals			1.465	309.54				
3+95 MH A2	5+95 MH A3	Main	8" PVC	200	0.622	140.8	2*154= 308 sec			Pass / Fail
		Laterals	4" PVC 6" PVC	20 30	0.0465 0.0466	5.28 7.92				
		Totals			0.715	154.0				

Note: For total $C \leq 1.0$, test time (seconds) required = 2 times K
For total $C > 1.0$, test time (seconds) required = 2 times (K/C)

The tested sewer section shall be considered acceptable when tested as described herein if the section under test does not loose air at a rate greater than 0.0015 cfm per square foot of internal sewer surface.

Copyright 1996
Westech Engineering, Inc

SANITARY SEWER MANDREL TEST REPORT

Project Location: (City)	Project Name:
Inspector: (Print)	Date: (Separate Report Required for Each Test Session)
Mandrel Diameters Verified? Yes / No	

Station (& Manhole #)		Size & Material	Length (ft)	Results	Backfill Compaction Completed?	Date Sewer Flushed & Cleaned	Comments
From	To						
				Pass / Fail	Yes / No		
				Pass / Fail	Yes / No		
				Pass / Fail	Yes / No		
				Pass / Fail	Yes / No		
				Pass / Fail	Yes / No		
				Pass / Fail	Yes / No		
				Pass / Fail	Yes / No		
				Pass / Fail	Yes / No		
				Pass / Fail	Yes / No		
				Pass / Fail	Yes / No		
				Pass / Fail	Yes / No		

1. Mandrel testing shall conducted on a manhole to manhole (or cleanout) basis and shall be done after the line has been completely flushed out with water.

2. Mandrel testing shall be conducted after trench backfill and compaction has been completed.

3. The mandrel diameter shall be 95% of the pipe initial inside diameter. The inspector shall verify the diameter of each mandrel used during each test session.

Copyright 1996
Westech Engineering, Inc

PIPELINE TV INSPECTION REPORT

Date:	Client: City:					Basin No.	
Technician:	Inspector:		Weather:	Cleaned By:		Report No.	Tape No.
From M.H. #: Street:	Pipe Dia. (in)	Joint Length (ft)	Section Length (ft)	Joint Type:	Pipe Material	To M.H. #: Street:	

PIPELINE DATA;

Cleanliness: _____

Alignment: _____

Grade: _____

Age: _____

%Est. Leaking Joints: _____

Other:_____

_____

Footage	Problem Code	Comments	I/I (gpm)

PROBLEM CODE LEGEND:

BP = Broken Pipe
CC = Circumferential Crack
LC = Longitudinal Crack
G = Break in Grade
L = Leak
PJ = Pulled Joint
PT = Protruding Tap
ST = Service Tap
SL = Service Left
SR = Service Right
RT = Roots
U = Unpassable

PIPE MATERIAL **LEGEND:**

AC = Asbestos Cement
CIP = Cast Iron Pipe
C(M) = Conc., Mortor Joint
C(R) = Conc., Rubr. Gasket Jnt
DI = Ductile Iron Pipe
PVC = Polyvinylchloride Pipe
TC = Terra Cotta
VC = Vitrified Clay

TURNAROUND:

Requested (Date/time):_____

Authorized (Date/time):_____

Copyright 1996
Westech Engineering, Inc

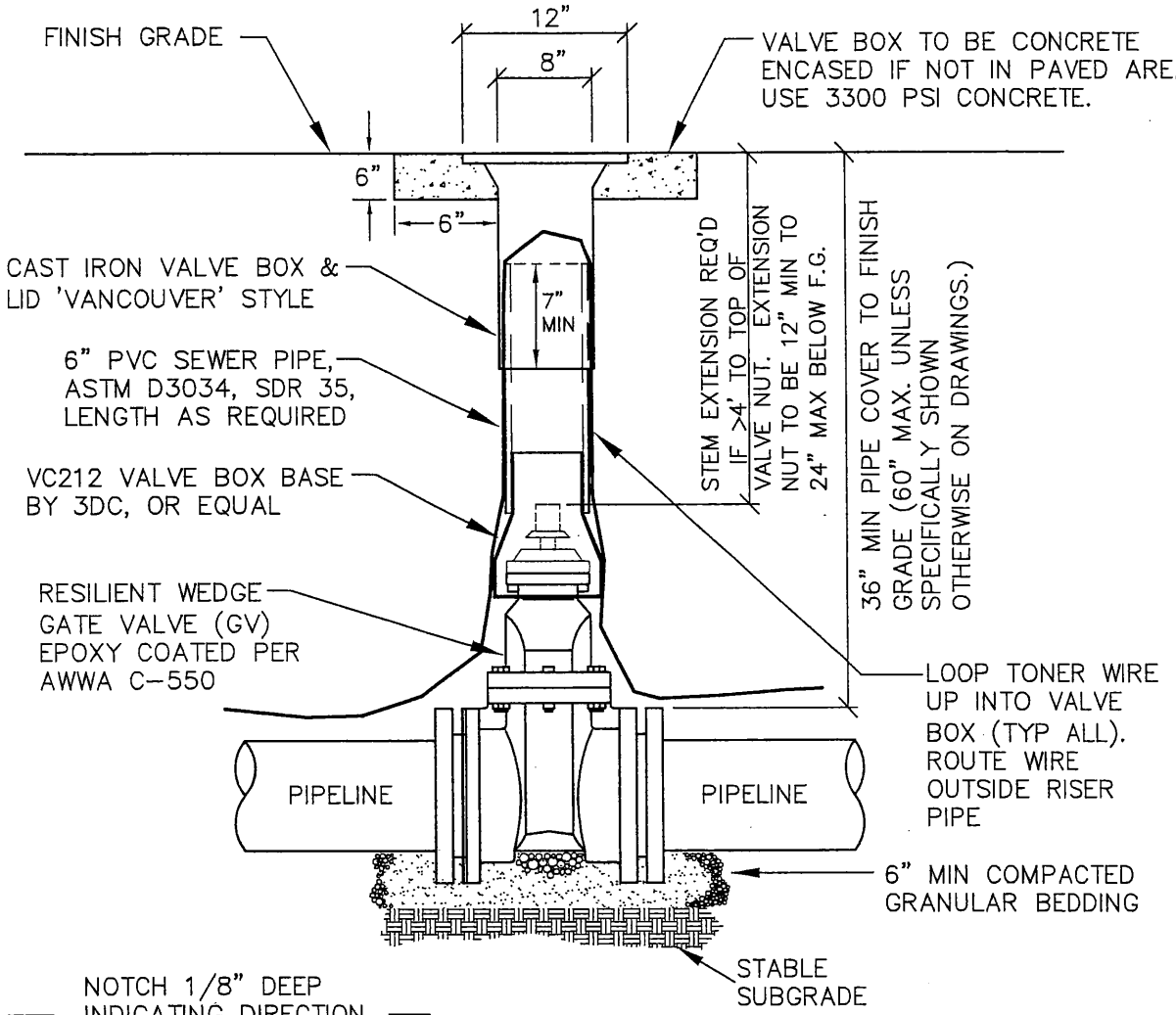

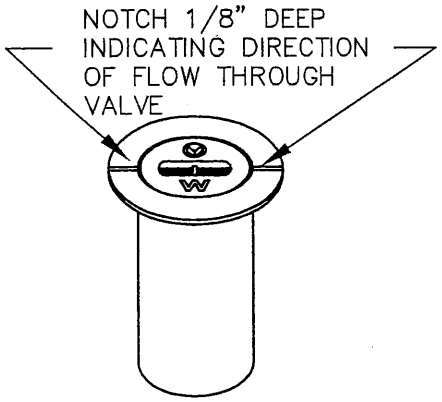

VANCOUVER '910' STYLE
18" TALL VALVE BOX

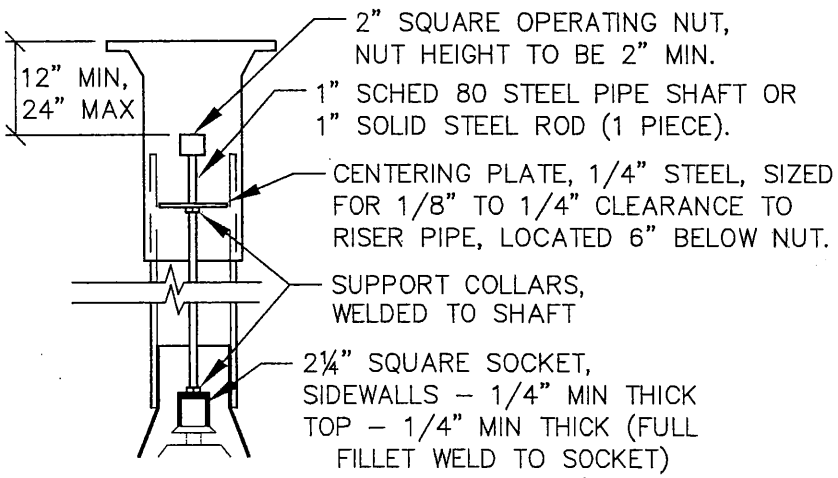

STEM EXTENSION

NOTES:

1. GV SHALL CONFORM TO AWWA C-509.
2. VALVE BOXES SHALL BE PLUMB AND CENTERED DIRECTLY OVER THE VALVE NUT.
3. VALVE BOX TOP SHALL BE ADJUSTED TO FINISHED GRADE.
4. PVC SHALL BE ONE CONTINUOUS PIECE, NO BELLS OR COUPLERS.

LAST REVISION DATE: SEPT 2013	JO # STANDARD
GATE VALVE AND VALVE BOX DETAIL (NTS)	
MT ANGEL, OR	DETAIL NO. 501

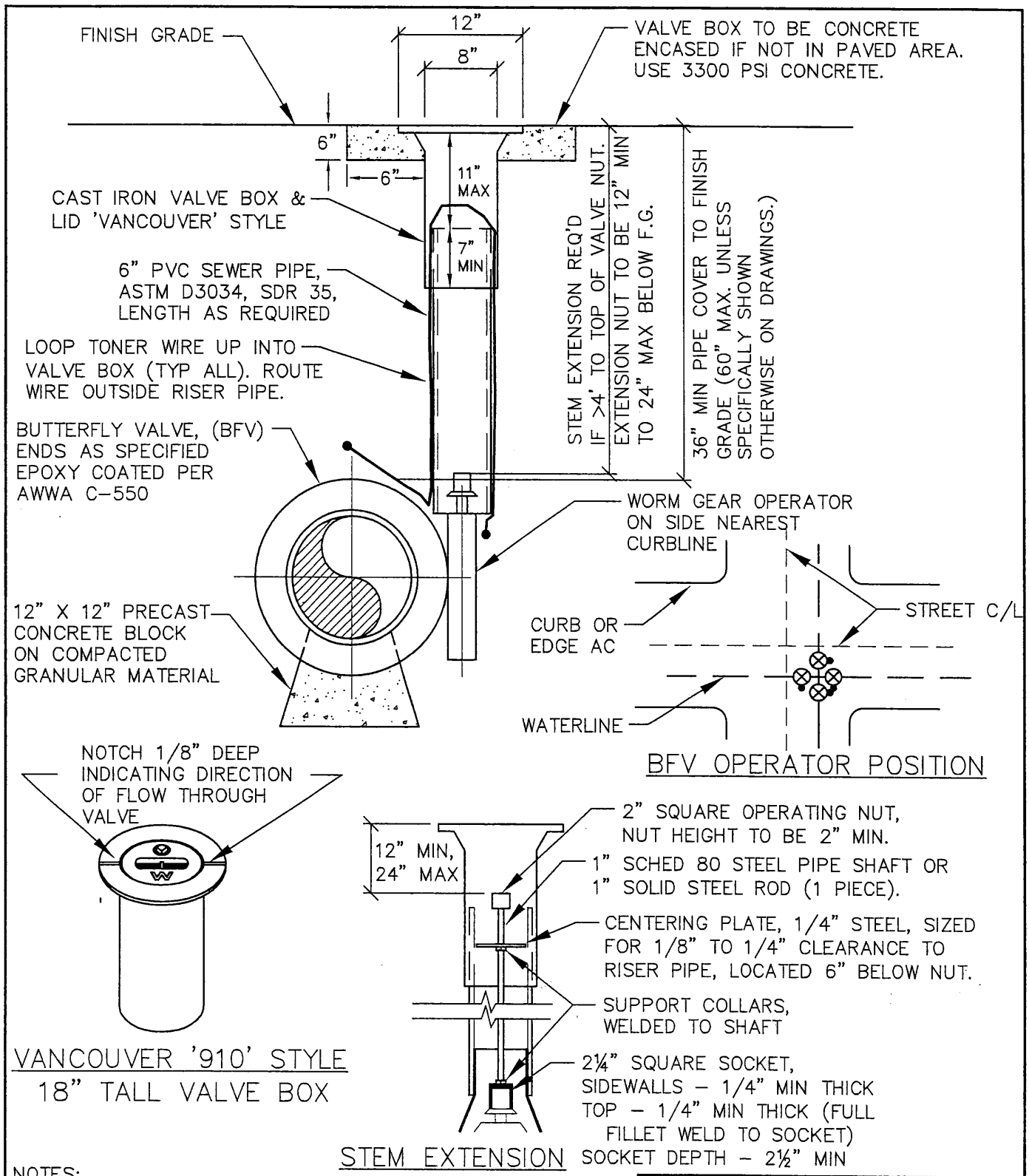

NOTES:

1. BFV SHALL BE SHORT BODY TYPE B VALVE PER AWWA C-504.
2. VALVE BOXES SHALL BE PLUMB AND CENTERED DIRECTLY OVER THE VALVE NUT.
3. VALVE BOX TOP SHALL BE ADJUSTED TO FINISHED GRADE.
4. PVC SHALL BE ONE CONTINUOUS PIECE, NO BELLS OR COUPLERS.
5. BFV ACTUATOR TO BE LOCATED ON THE CURBLINE SIDE OF WATERLINE AS SHOWN. INSTALL DI SPOOLS OR FLEX ADAPTER IF REQUIRED FOR ACTUATOR CLEARANCE.

LAST REVISION DATE: SEPT 2013	JO # STANDARD
BUTTERFLY VALVE AND VALVE BOX DETAILS (NTS)	
MT ANGEL, OR	DETAIL NO. 502

NOTE: HYDRANT COLOR TO BE FACTORY YELLOW

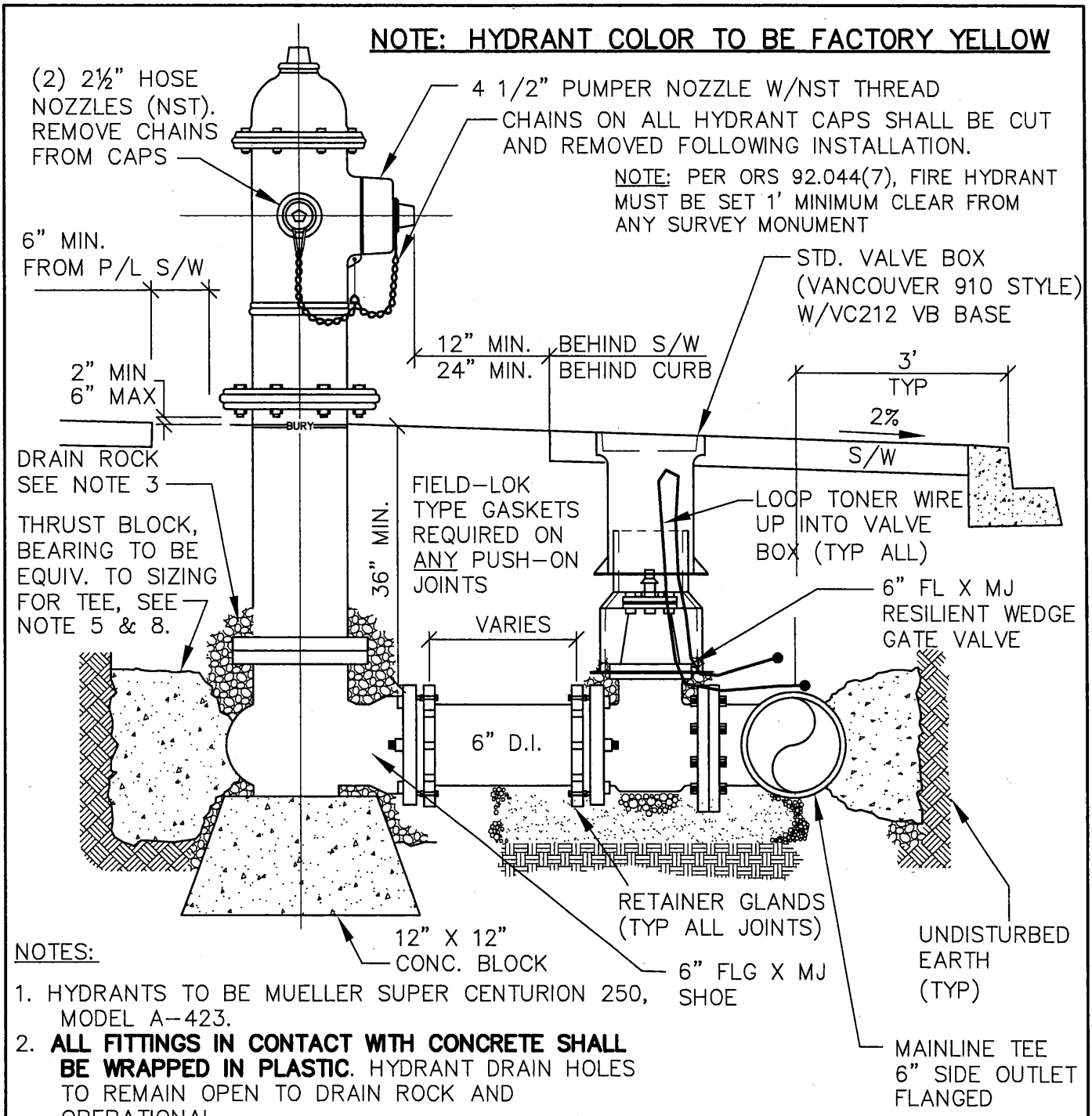

NOTES:

1. HYDRANTS TO BE MUELLER SUPER CENTURION 250, MODEL A-423.
2. **ALL FITTINGS IN CONTACT WITH CONCRETE SHALL BE WRAPPED IN PLASTIC.** HYDRANT DRAIN HOLES TO REMAIN OPEN TO DRAIN ROCK AND OPERATIONAL.
3. 1-1/2" TO 3/4" CLEAN DRAIN ROCK SHALL BE PLACED A MIN. OF 6" ABOVE DRAIN OUTLET.
4. WHERE PLANTER STRIP EXISTS, HYDRANT SHALL BE PLACED SO FRONT PORT IS A MIN. OF 24" BEHIND FACE OF CURB.
5. THRUST BLOCK AT STANDARD 6" FIRE HYDRANT TEE SHALL HAVE MIN. 3.7 SQ. FT. BEARING AREA.
6. ALL HYDRANTS SHALL BE SET PLUMB.
7. FOR HYDRANT LEADS LONGER THAN 30', AN ADDITIONAL GATE VALVE SHALL BE PROVIDED WITHIN 3 FT. OF THE HYDRANT.
8. RETAINER GLANDS MAY BE USED IN LEIU OF HYDRANT THRUST BLOCK ON NEAR SIDE HYDRANTS.
9. PAINT CURB YELLOW 10 FEET EACH WAY FROM HYDRANT & INSTALL REFLECTIVE BLUE TRAFFIC MARKER @ STREET CENTERLINE.

LAST REVISION DATE: SEPT 2013.v2	COPYRIGHT 1996 WESTECH ENGINEERING, INC.
STANDARD FIRE HYDRANT ASSEMBLY (NTS)	
MT ANGEL, OR	DETAIL NO. 503

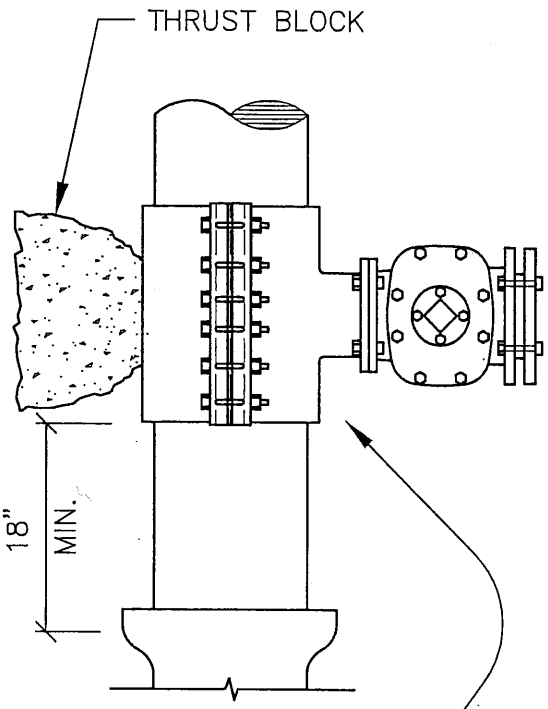

ROMAC SST/SSTIII, MUELLER H304, JCM MODEL 432 OR APPROVED EQUAL (STAINLESS STEEL SLEEVE & FLANGE)

TOP VIEW

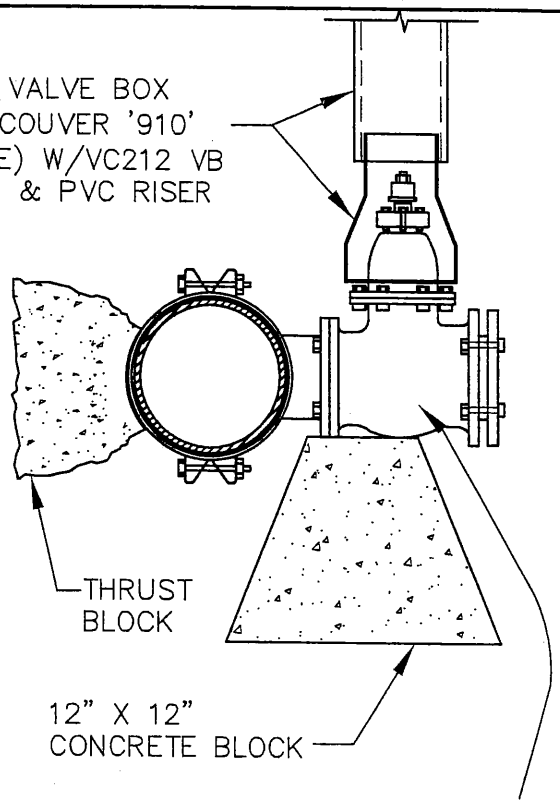

RESILIENT WEDGE GATE VALVE (FL x MJ UNLESS OTHERWISE NOTED ON PLANS)

SIDE VIEW

NOTES:

1. WATER MAIN SHALL BE CLEANED & SPRAYED WITH CHLORINE SOLUTION IN TAP AREA BEFORE ATTACHING SLEEVE.
2. TAPPING SLEEVE SHALL BE ALL STAINLESS STEEL WITH FULL PERIMETER GASKET.
3. TAPPING VALVE SHALL BE EPOXY COATED PER AWWA C-550.
4. SLEEVE AND VALVE SHALL BE PRESSURE TESTED BEFORE MAKING TAP. PRESSURE TEST AND TAP SHALL BE MADE IN THE PRESENCE OF AN AUTHORIZED CITY REPRESENTATIVE.
5. APPROVED TAPPING MACHINE SHALL BE USED TO MAKE TAP.
6. 3/4" GRANULAR BACKFILL SHALL BE PLACED AND COMPACTED TO 95% OF MAXIMUM DENSITY AS DETERMINED BY AASHTO T-180.
7. THRUST BLOCKING REQUIREMENTS SHALL BE DETERMINED BY THE ENGINEER.
8. TAP SHALL BE MADE NO CLOSER THAN 18" FROM THE NEAREST JOINT.
9. **SLEEVE AND VALVE SHALL BE WRAPPED WITH 8 MIL PLASTIC PRIOR TO CONCRETE PLACEMENT.**
10. CONCRETE BLOCK(S) SHALL COMPLETELY SUPPORT TAPPING TEE AND VALVE.
11. CONTRACTOR SHALL COORDINATE ALL TAPS WITH CITY AND PERFORM ALL TAPS WITH PUBLIC WORKS STAFF PRESENT.
12. ALL TAPPING EQUIPMENT (AND ANY TOOL COMING IN CONTACT WITH THE PIPE THOUGH THE TAPPING SLEEVE) SHALL BE CHLORINE DISINFECTED WITH A 300 MG/L CHLORINE SOLUTION.

LAST REVISION DATE: SEPT 2013	COPYRIGHT 1996 WESTECH ENGINEERING, INC.
TAPPING TEE AND VALVE (NTS)	
MT ANGEL, OR	DETAIL NO. 505

BLOW-OFF SIZES REQUIRED (ASSUMES 40 PSI RESIDUAL PRESS.)	
MAIN SIZE	BLOW-OFF SIZE
6" – 8"	2"
10" – 12"	4"
>12"	BY ENGR.

NOTES:

1. BACKFILL WITH GRANULAR BACKFILL.
2. REQUIRED ON ALL LINES WHICH MAY BE EXTENDED IN FUTURE OR AS DIRECTED BY CITY ENGINEER.
3. ALL CONCRETE TO BE 3300 PSI @ 28 DAYS.
4. FLANGED DUCTILE IRON PIPE AND FITTINGS MAY BE REQUIRED FOR 4" & LARGER BLOWOFFS.

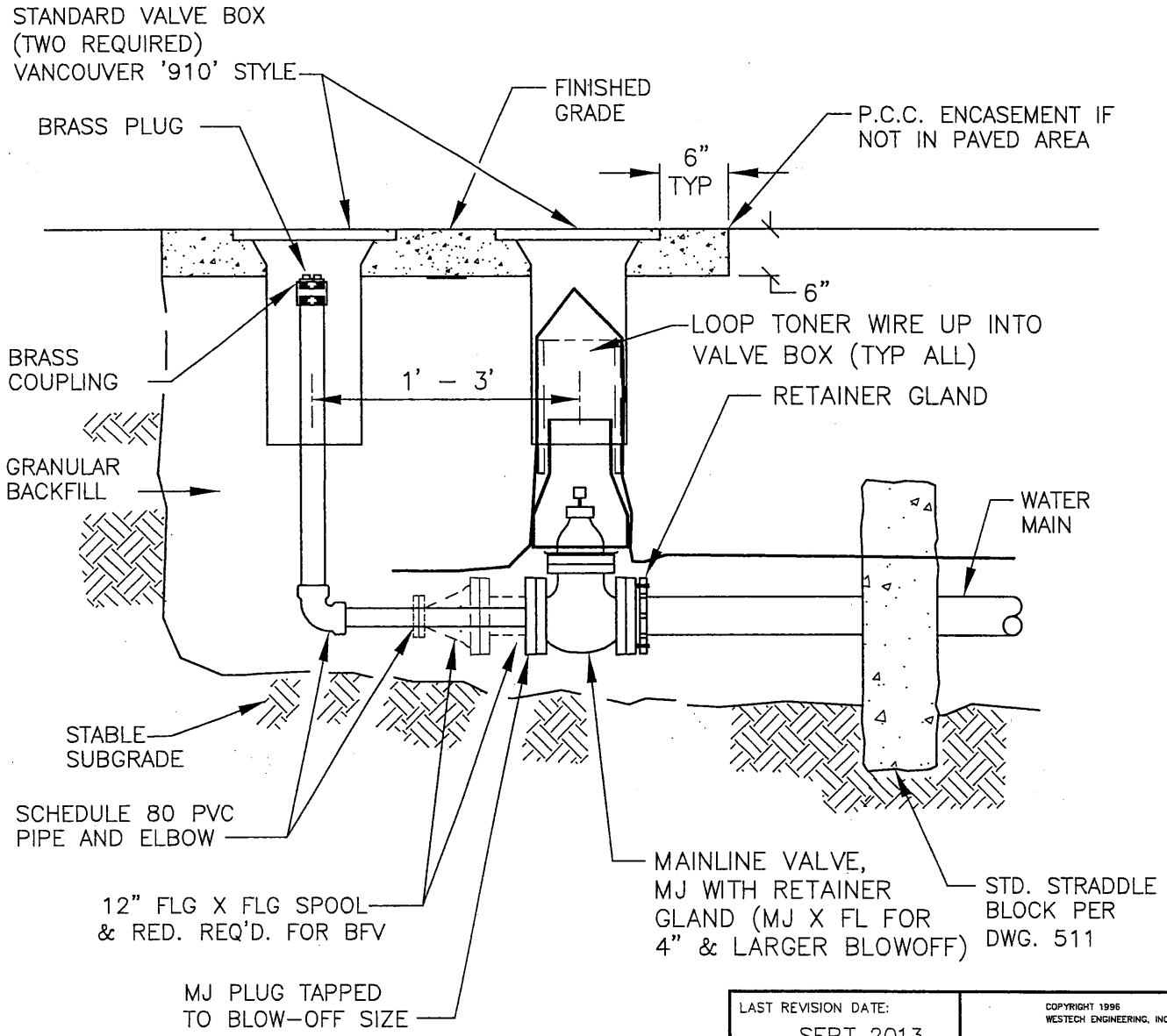

NOTE: PER ORS 92.044(7), VALVE BOXES MUST BE SET 1' MINIMUM CLEAR FROM ANY SURVEY MONUMENT

LAST REVISION DATE: SEPT 2013	COPYRIGHT 1996 WESTECH ENGINEERING, INC.
MAINLINE BLOWOFF ASSEMBLY (NTS)	
MT ANGEL, OR	DETAIL NO. 506

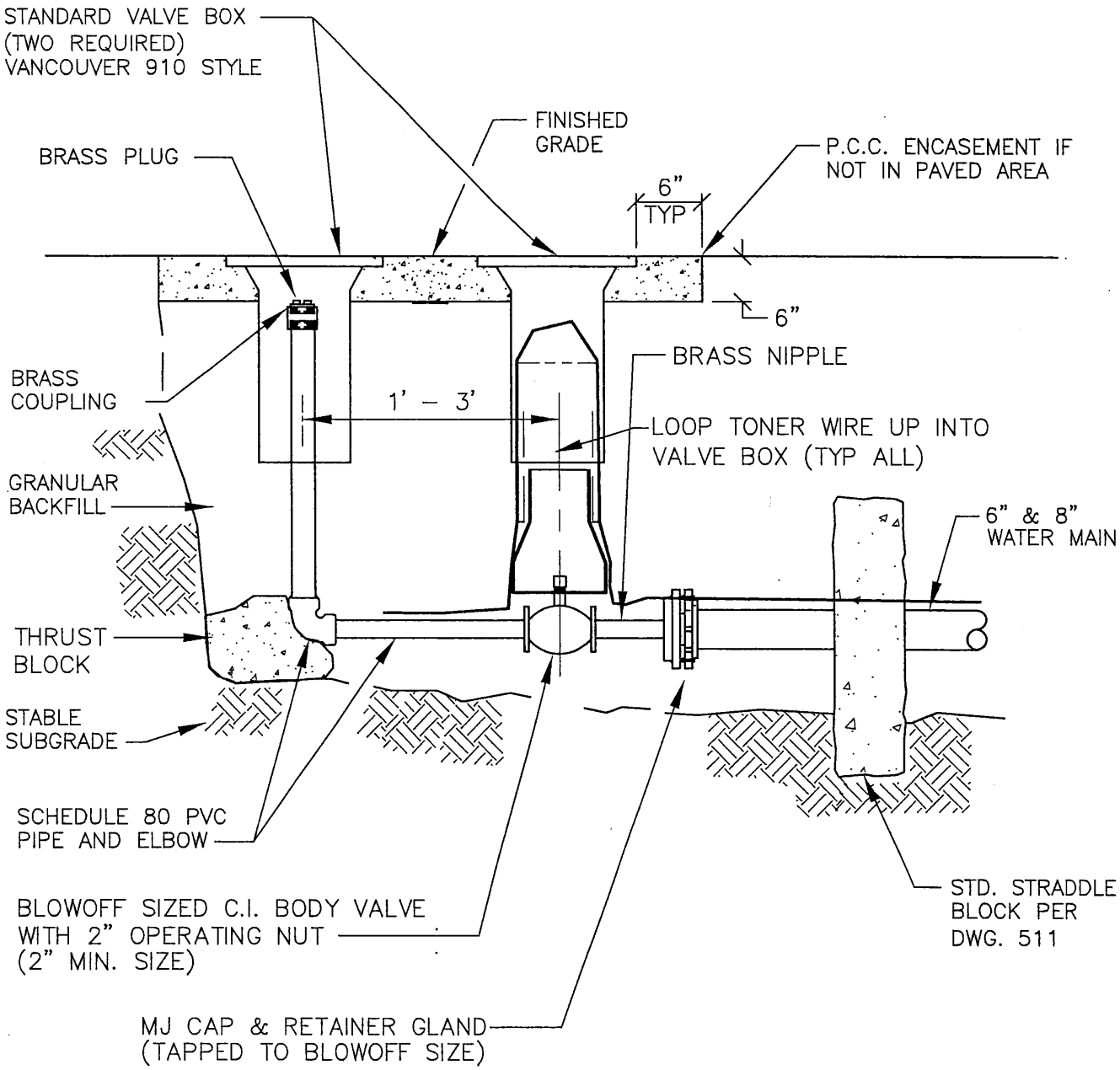

NOTE: PER ORS 92.044(7), VALVE BOXES MUST BE SET 1' MINIMUM CLEAR FROM ANY SURVEY MONUMENT

NOTES:

1. BACKFILL WITH GRANULAR BACKFILL.
2. ALLOWED ONLY ON PERMANENT DEAD END LINES IN CUL-DE-SACS WHICH CANNOT BE EXTENDED IN THE FUTURE.
3. ALL CONCRETE TO BE 3300 PSI @ 28 DAYS.
4. 2" BLOWOFF SIZE ASSUMES 40 PSI RESIDUAL PRESSURE.

LAST REVISION DATE: SEPT 2013	COPYRIGHT 1996 WESTECH ENGINEERING, INC.
STANDARD BLOWOFF WITH PLUGGED END (NTS)	
MT ANGEL, OR	DETAIL NO. 507

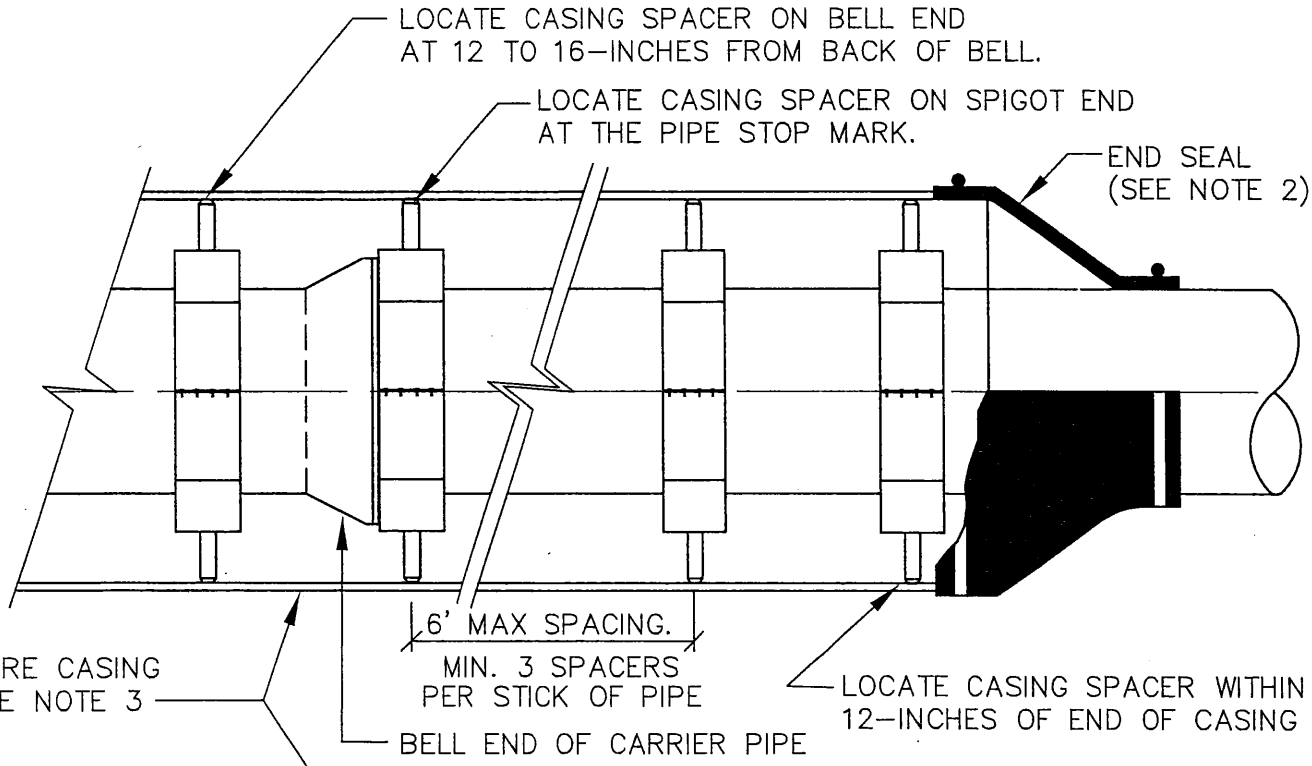

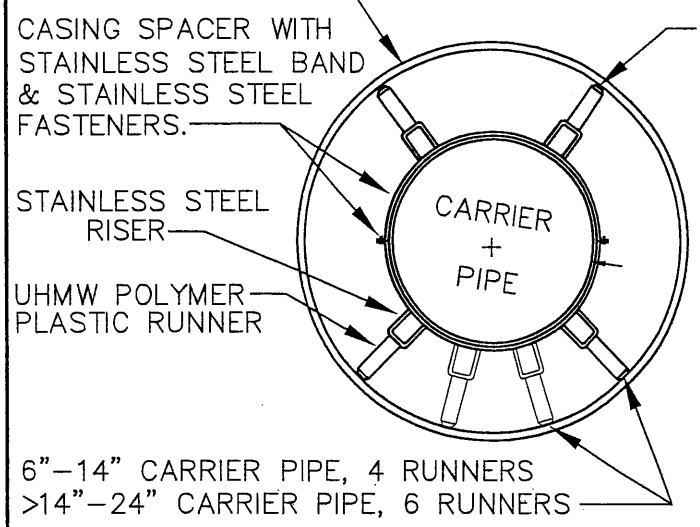

CARRIER PIPE DIAMETER	MIN. DIA. CASING (*1, *2)	MIN CASING WALL THICKNESS (INCH)
6"	12"	0.25 (1/4)
8"	14"	0.25 (1/4)
10"	16"	0.312 (5/16)
12"	18"	0.375 (3/8)

*1: CASING SIZE LISTED IS FOR PRESSURE PIPE. LARGER DIA CASING REQ'D FOR GRAVITY PIPE.
*2: SEE PWDS 5.8.m FOR GRAVITY PIPE CASING SIZE REQUIREMENTS OR LARGER CASING SIZES.

NOTES:

1. CASING SPACERS – APS MODEL SSI, CALPICO M–SS SERIES OR APPROVED EQUIV. 4"–18" CARRIER PIPE, USE 8" WIDE BAND. >18" CARRIER PIPE, USE 12" WIDE BAND.
2. SEAL BOTH ENDS OF BORE CASING WITH END SEALS. WITHOUT SAND FILL, USE APS MODEL AZ OR APPROVED EQUIV. FASTEN TO CASING AND CARRIER PIPE WITH ST. STEEL BANDS. WITH SAND FILL, USE GROUT END CAPS (PLUG VENT TUBES AFTER SAND FILL).
3. CASING SHALL BE WELDED SMOOTH STEEL PIPE CONFORMING TO ASTM A–53, GRADE B OR APPROVED EQUIVALENT (Fy = 35,000 psi).
4. CARRIER PIPE DIAMETER & MATERIAL AS PER DWGS.
5. FOR GRAVITY SEWER OR STORM CARRIER PIPES, THE CASING ANNULAR SPACE SHALL BE COMPLETELY FILLED WITH SAND TO PREVENT FLOATATION OF CARRIER PIPE BY GROUNDWATER.
6. CARRIER PIPE SHALL BE COMPLETELY FILLED WITH WATER PRIOR TO INSTALLING OR BLOWING SAND.
7. INCREASE CASING DIA AS REQ'D TO ALLOW TRIMMING OF CASING SPACERS ON GRADE CRITICAL BORES

LAST REVISION DATE: SEPT 2013	COPYRIGHT 1996 WESTECH ENGINEERING, INC.
BORE CASING, CARRIER PIPE AND CASING SPACER DETAIL (NTS)	
MT ANGEL, OR	DETAIL NO. 508

FITTING SIZE (Inches)	TEE, WYE, & ① HYDRANTS	90° BEND ② PLUGGED CROSS TEE PLUGGED–RUNS	45° BEND ③	22 1/2° BEND ③	11 1/4° BEND ③
2	*	*	*	*	*
4	1.7	2.4	1.3	*	*
6	3.7	5.3	2.9	1.5	*
8	6.7	9.5	5.1	2.7	1.3
10	10.5	14.8	8	4.1	2
12	15.1	21.3	11.6	5.9	2.9
16	26.8	37.9	20.5	10.4	5.2
18	33.9	47.9	25.9	12.8	6.7
LARGER	* *	* *	* *	* *	* *
	BEARING AREA OF THRUST BLOCKS (sq. ft.)				

1. ALL VALUES ARE BASED ON THE FOLLOWING ASSUMPTIONS: AVG. PRESSURE = 100 PS1 x 2 (safety factor); 1500 PSF SOIL BEARING CAPACITY; NORMAL DISTRIBUTION DESIGN VELOCITY NOT TO EXCEED 5 FPS.
2. **ALL FITTINGS SHALL BE WRAPPED IN PLASTIC PRIOR TO PLACEMENT OF CONCRETE.**
3. BEARING SURFACE OF THRUST BLOCKING SHALL BE AGAINST UNDISTURBED SOIL.
4. ALL CONCRETE MIX SHALL HAVE A MIN. 28 DAY STRENGTH OF 3300 PSI.
5. ALL PIPE ZONES SHALL BE BACKFILLED WITH GRANULAR BACKFILL AND COMPACTED.
6. THRUST BLOCKS FOR PLUGGED CROSS AND PLUGGED TEE SHALL HAVE #4 REBAR LIFTING LOOPS INSTALLED AS SHOWN.
7. VERTICAL THRUST DETAILS–SEE DWG. 512.
8. STRADDLE BLOCK DETAILS–SEE DWG. 511.

* BLOCK TO UNDISTURBED TRENCH WALLS

* * THRUST BLOCKS FOR PIPES LARGER THAN 18" WILL BE INDIVIDUALLY DESIGNED BY THE ENGINEER.

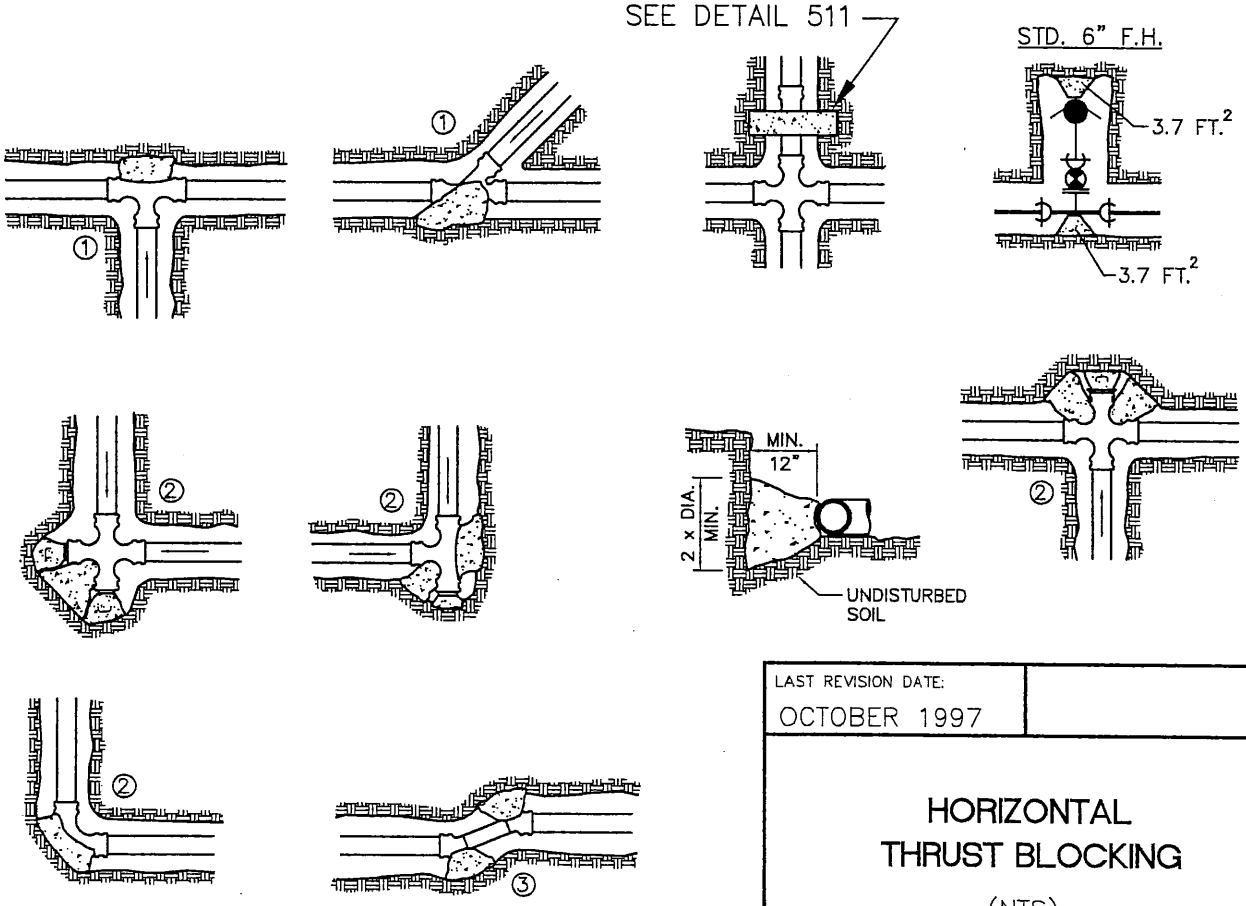

LAST REVISION DATE: OCTOBER 1997	
HORIZONTAL THRUST BLOCKING (NTS)	
MT ANGEL, OR	DETAIL NO. 510

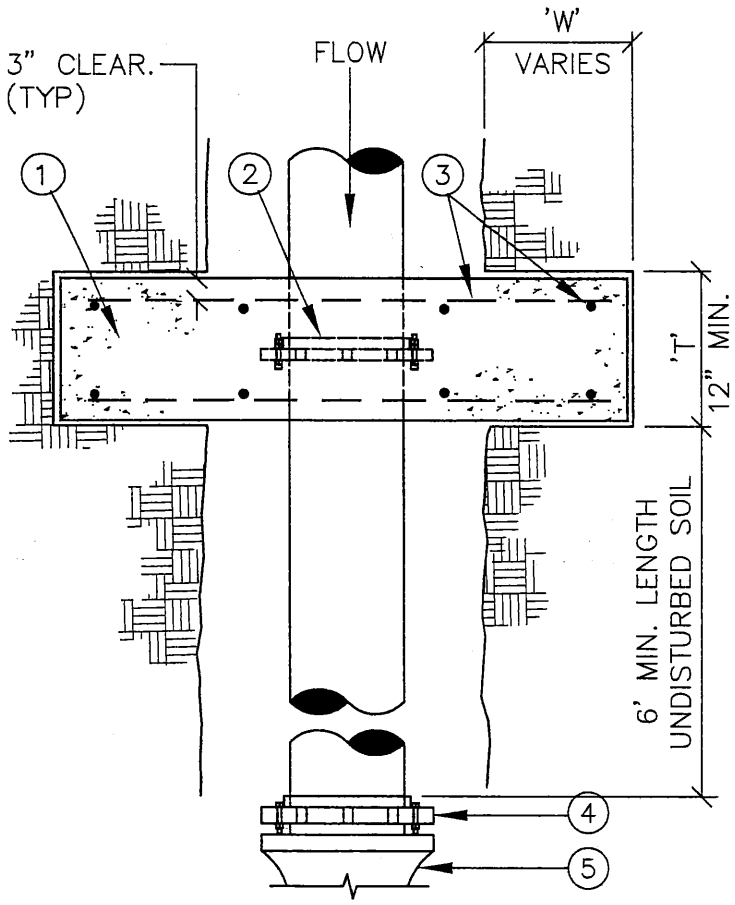

TOP VIEW

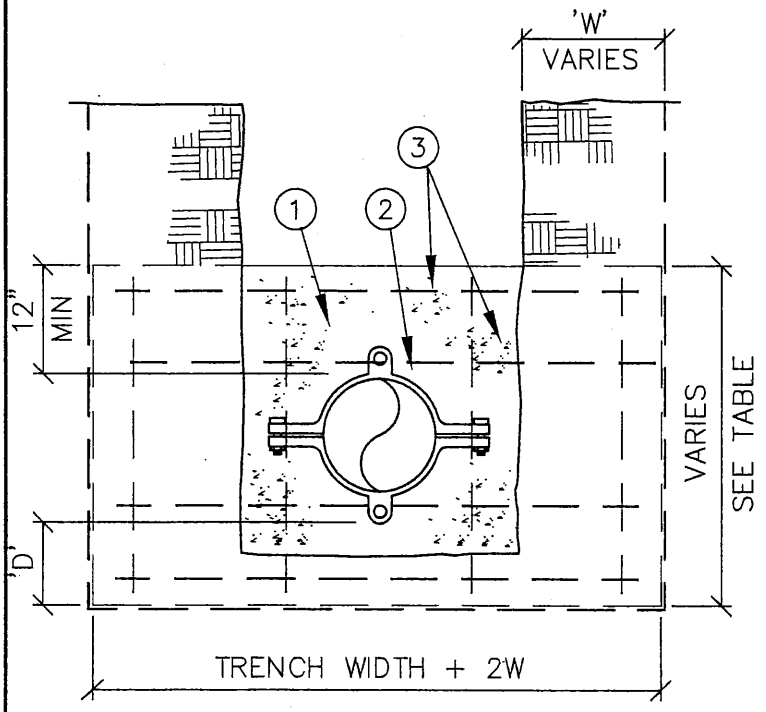

FRONT VIEW

MATERIALS

1. CONCRETE STRADDLE BLOCK.
2. –ONE SERRATED–LOCK STYLE SPLIT–RING RESTRAINT HARNESS (ROMAC 600 OR EQUAL), OR TWO WEDGE–STYLE SPLIT–RING RESTRAINTS (SET OPPOSED).
   –WEDGE STYLE RESTRAINTS SHALL BE WRAPPED WITH PLASTIC PRIOR TO CONCRETE PLACEMENT.
3. #4 REBAR EA. WAY, 12" O.C.
4. RETAINER GLAND.
5. MJ FITTING, VALVE OR BLOWOFF.

PIPE SIZE	'W'	'D'	'T'
6"	12"	8"	12"
8"	16"	10"	12"
10"	20"	12"	12"
12"	24"	18"	18"
>12"	BY ENGINEER		

NOTES:

1. STRADDLE BLOCKS FOR >12" PIPE SHALL BE DESIGNED INDIVIDUALLY BY THE ENGINEER AND SHALL BE BASED ON THE FOLLOWING:
   a.) 200 PSI WATER PRESSURE.
   b.) SOIL BRG. CAPACITY, STEEL SIZE & SPACING BY THE ENGINEER.
2. BEARING AREA OF BLOCK SHALL BE AGAINST UNDISTURBED SOIL.
3. STRADDLE BLOCK SHALL HAVE A MINIMUM OF 18" COVER.
4. CONCRETE SHALL HAVE A MIN. 28 DAY STRENGTH OF 3300 PSI.

LAST REVISION DATE: SEPT 2013	COPYRIGHT 1995 WESTECH ENGINEERING, INC.
STRADDLE BLOCK FOR 12" AND SMALLER PIPE (NTS)	
MT ANGEL, OR	DETAIL NO. 511

NOTES:

1. GRAVITY VERTICAL THRUST BLOCKS SHALL BE DESIGNED BY THE ENGINEER.
2. **KEEP CONCRETE CLEAR OF JOINT AND JOINT ACCESSORIES. FITTINGS SHALL BE WRAPPED IN PLASTIC PRIOR TO PLACEMENT OF CONCRETE.**
3. CONCRETE THRUST BLOCKING SHALL BE POURED AGAINST UNDISTURBED EARTH.
4. CONCRETE MIX SHALL HAVE A MIN. 28 DAY STRENGTH OF 3000 P.S.I.
5. THRUST BLOCK VOLUMES FOR VERTICAL BENDS HAVING UPWARD RESULTANT THRUSTS ARE BASED ON TEST PRESSURE OF 150 P.S.I.G. AND THE WEIGHT OF CONCRETE = 4050 LBS./CU.YD.
6. VERTICAL BENDS THAT REQUIRE A THRUST BLOCK VOLUME EXCEEDING 5 CUBIC YARDS REQUIRE SPECIAL BLOCKING DETAILS. SEE PLANS FOR VOLUMES SHOWN INSIDE HEAVY LINE IN TABLE.
7. ALL REBAR SHALL BE GALVANIZED IN ACCORDANCE WITH ASTM-123 (MIN. 3.4 MIL). REBAR SHALL BE BENT BEFORE GALVANIZATION, AND LAST 4" OF BAR SHALL BE BENT 90 DEGREES WITH A 1/2" RADIUS BEND. REBAR SHALL BE TIGHTLY FIT TO RESTRAINED FITTING.
8. FOR HORIZONTAL THRUST BLOCK DETAILS SEE DRAWING NO. 510.

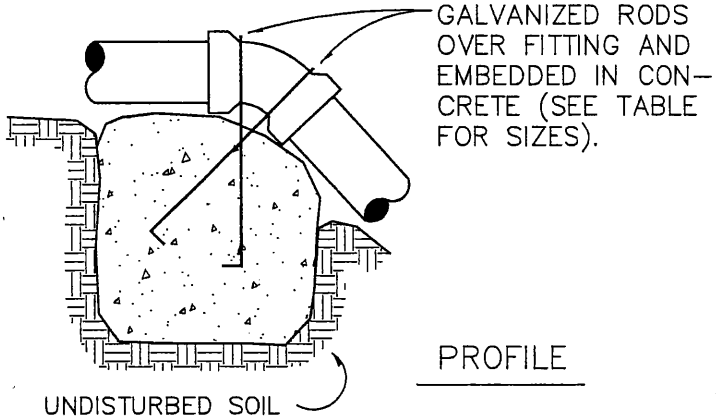

PROFILE

GRAVITY VERTICAL THRUST BLOCK

SIZED LIKE HORIZONTAL THRUST BLOCKS

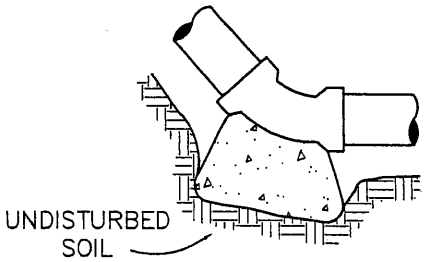

PROFILE

NORMAL VERTICAL THRUST BLOCK

VOLUME OF THRUST BLOCK IN CUBIC YARDS (VERTICAL BENDS)			
FITTING SIZE	BEND ANGLE		
	45°	22 1/2°	11 1/4°
4	1.1	0.4	0.2
6	2.7	1.0	0.4
8	4.0	1.5	0.6
10	6.0	2.3	0.9
12	8.5	3.2	1.3
14	11.5	4.3	1.8
16	14.8	5.6	2.3

FITTING SIZE	ROD SIZE	EMBED-MENT
12" AND LESS	#6	30"
14" – 16"	#8	36"

LAST REVISION DATE:
OCTOBER 1997

VERTICAL THRUST BLOCKING

(NTS)

MT ANGEL, OR

DETAIL NO. **512**

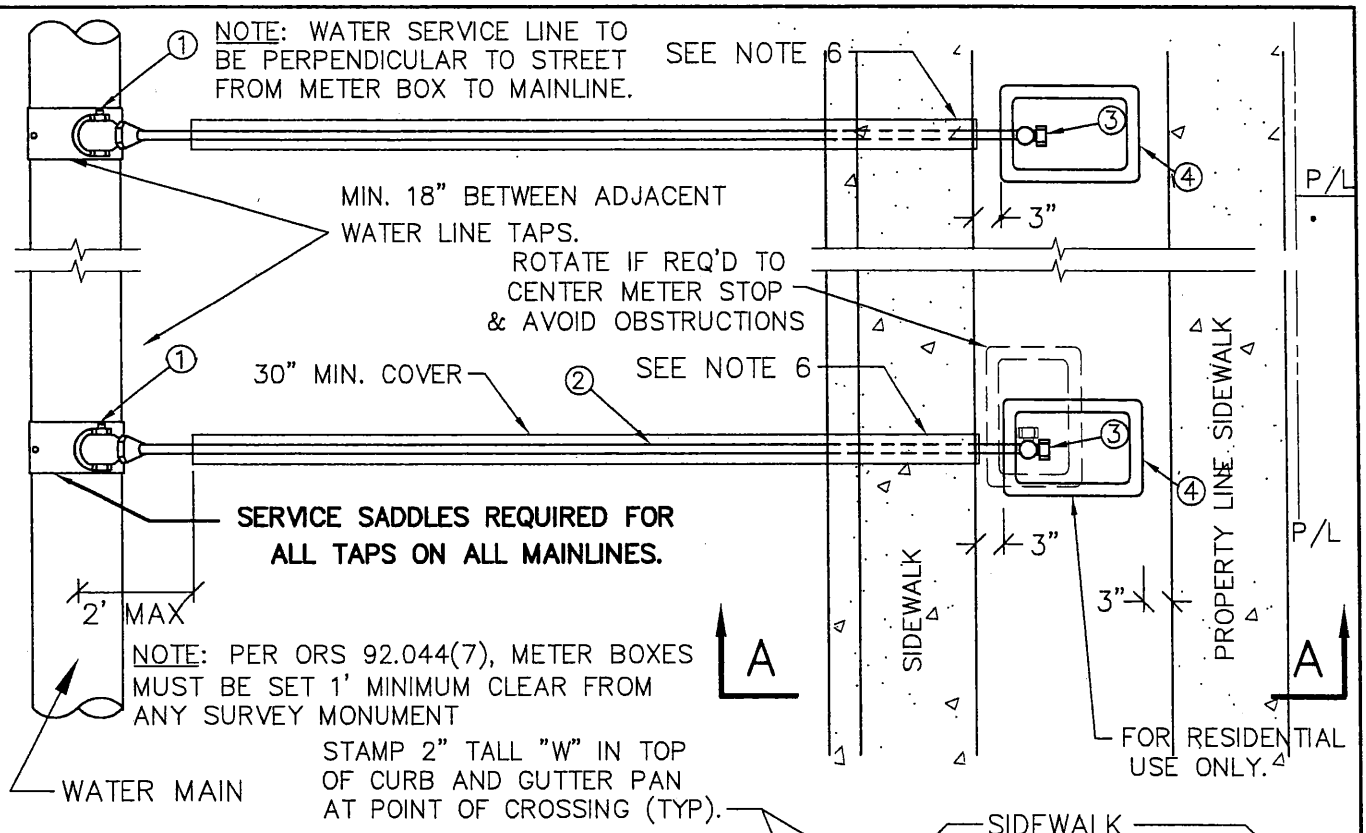

MATERIALS:

① BALL STYLE CORPORATION STOP FORD FB-1100. SET AT 30° ANGLE UP FROM HORIZONTAL.

② SOFT TEMPER TYPE 'K' COPPER TUBING COMPLYING W/ASTM B-88. SINGLE RESIDENTIAL SERVICE: 1" (TYP)

③ BALL STYLE 1" LOCKING ANGLE METER STOP, FORD KV43-444WQ OR EQUAL. PROVIDE ALL SERVICES WITH 1" x 3/4" METER ADAPTER

④ ARMORCAST POLYMER CONCRETE METER BOX:
A6001946PCX12 W/A6001866 LID IN TRAFFIC AREAS
A6001946PCX12 W/A6001866R LID ELSEWHERE

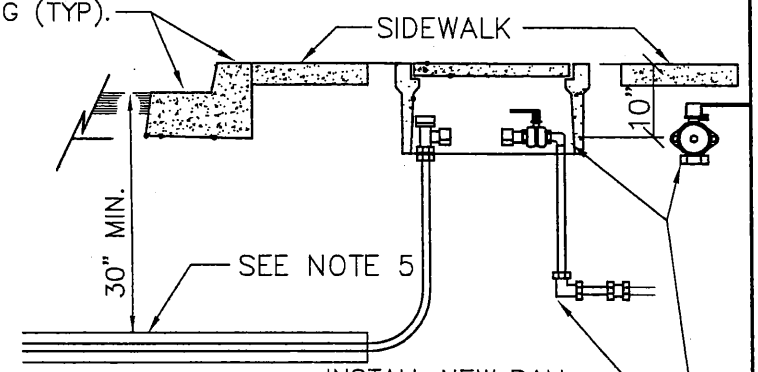

SECTION A-A

METER COUPLING (TAIL), ANGLE BALL VALVE W/HANDLE. PROVIDE PRIOR TO WATER METER INSTALLATION.

NOTES:

1. SUBSTITUTES FOR ANY MATERIALS SHOWN SHALL BE APPROVED BY THE CITY ENGINEER.
2. ALL PIPE AND BACKFILL ZONES SHALL BE BACKFILLED USING 3/4" MINUS GRANULAR MATERIAL AND COMPACTED TO 92% MAX. DENSITY DETERMINED BY AASHTO T-180.
3. SET FRONT OF METER BOX 3-INCHES BEHIND BACK OF SIDEWALK LOCATION FOR CURBLINE WALKS.
4. METER BOX SHALL BE CENTERED OVER THE COMPLETED METER ASSEMBLY.
5. MIN. SIZE COMMERCIAL SERVICES SHALL BE 1 1/2-INCH.
6. FAR SIDE COMMERCIAL SERVICES SHALL BE INSTALLED IN A 4" MIN DIA SCHED 40 PVC SLEEVE WHICH BEGINS 2' FROM MAIN AND EXTENDS TO BACK OF FAR SIDE SIDEWALK.

LAST REVISION DATE: SEPT 2013	COPYRIGHT 1996 WESTECH ENGINEERING, INC.
TYPICAL 1" WATER SERVICE (NTS)	
MT ANGEL, OR	DETAIL NO. 515

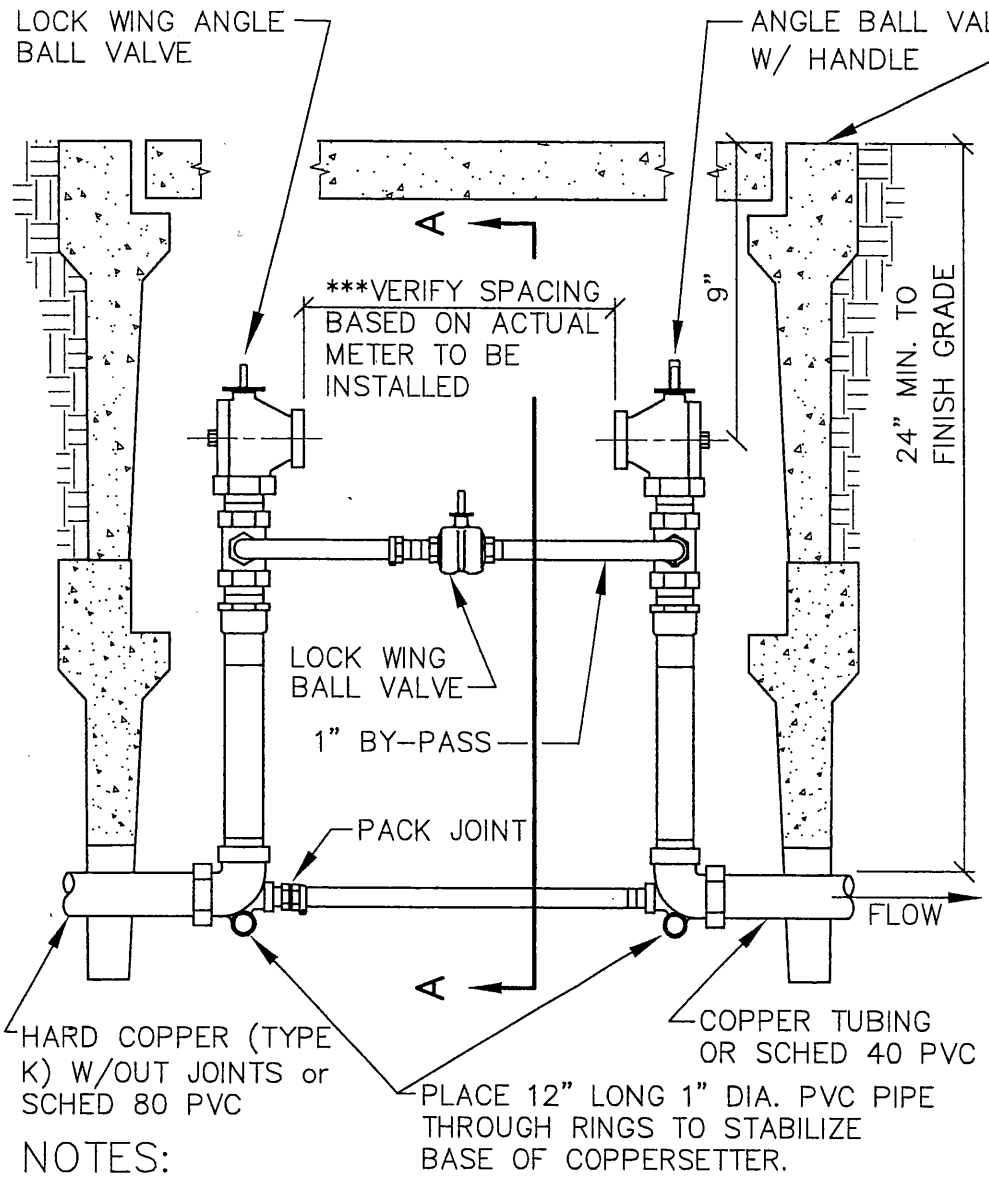

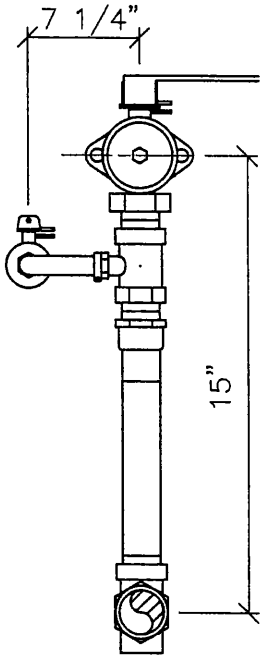

SECTION A–A

NOTE: PER ORS 92.044(7), METER BOXES MUST BE SET 1' MINIMUM CLEAR FROM ANY SURVEY MONUMENT

NOTES:

1. METERSET TO BE FORD 70 SERIES COPPERSETTER, #VBB76–12HB–11–66 (1½") OR #VBB77–12HB–11–77 (2") WITH RAISED LOCKING BYPASS OR APPROVED EQUAL.
2. SUBSTITUTES FOR ANY MATERIALS SHOWN SHALL BE APPROVED BY THE CITY ENGINEER.
3. ALL PIPE AND BACKFILL ZONES SHALL BE BACKFILLED USING 3/4" MINUS GRANULAR MATERIAL AND COMPACTED TO 92% OPTIMUM DENSITY PER AASHTO T–180.
4. SET FRONT OF METER BOX 3–INCHES BEHIND SIDEWALK (TYPICAL) FOR CURBLINE WALKS. NO METERS ON PRIVATE PROPERTY WITHOUT A RECORDED EASEMENT.
5. METER BOX SHALL BE CENTERED OVER THE COMPLETED METER ASSEMBLY. METER BOX TO BE ARMORCAST –A6001974PCX12 W/A6001975 LID IN NON–TRAFFIC AREAS, –TRAFFIC RATED VERSION OF BOX/LID IN TRAFFIC AREAS.
6. COPPERSETTER, METER BOX, & ALL FITTINGS PROVIDED BY CONTRACTOR. CONTRACTOR TO VERIFY DIMENSIONS & CLEARANCE BASED ON ACTUAL METER TO BE PROVIDED BY THE CITY. WATER METER INSTALLED BY CONTRACTOR UNDER CITY INSPECTION & APPROVAL.
7. SEE DETAIL 517 FOR TAPPING REQUIREMENTS.

***TYPICAL METER LENGTHS (VERIFY)
1½" COMPOUND – 13" TYP,
2" COMPOUND – 15¼" TYP,
2" TURBINE – 17" TYP.

LAST REVISION DATE: SEPT 2013	COPYRIGHT 1996 WESTECH ENGINEERING, INC.
1-1/2" AND 2" METER SET W/1" HIGH BY-PASS (NTS)	
MT ANGEL, OR	DETAIL NO. 516

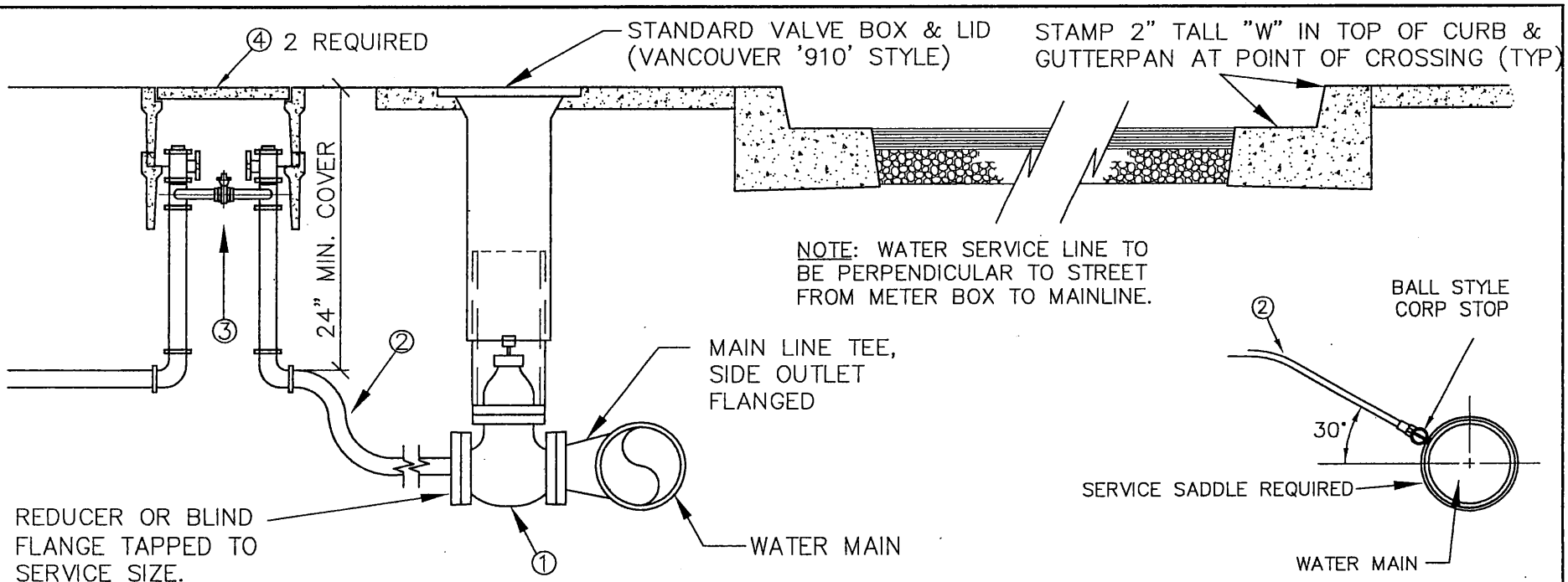

2" & LARGER SERVICE

NOTE: PER ORS 92.044(7), METER BOXES MUST BE SET 1' MINIMUM CLEAR FROM ANY SURVEY MONUMENT

1-1/2" SERVICE

MATERIALS

① FLG X FLG RESILIENT WEDGE GATE VALVE PER AWWA C-509. 4" DIA. OR SERVICE SIZE, WHICHEVER IS LARGER. EPOXY COATED PER AWWA C-550.

② HARD COPPER (TYPE K) W/OUT JOINTS OR SCHEDULE 80 PVC PIPE & FITTINGS.

③ METER STOP ASSEMBLY W/BYPASS PER PUBLIC WORKS REQUIREMENTS. SEE DETAIL 516 FOR 1-1/2 & 2" SERVICES.

④ METER BOX FOR 1-1/2" AND 2" SHALL BE PER DETAIL 516. USE TRAFFIC RATED VERSION OF BOX/LID FOR TRAFFIC AREAS. METER VAULT FOR LARGER SERVICE PER PUBLIC WORKS REQUIREMENTS.

NOTES

1. SUBSTITUTES FOR ANY MATERIAL SHOWN SHALL BE APPROVED BY THE CITY ENGINEER.
2. ALL PIPE AND STRUCTURE ZONES SHALL BE BACKFILLED USING 3/4" MINUS GRANULAR MATERIAL AND COMPACTED TO 95% MAX DENSITY AS DETERMINED BY ASHTO T-180.
3. METER BOX SHALL BE CENTERED OVER THE COMPLETED METER AND FITTING ASSEMBLY.
4. CUSTOMER SHALL INSTALL AN APPROVED BACKFLOW PREVENTION DEVICE ON PRIVATE PROPERTY IMMEDIATELY DOWNSTREAM OF WATER METER.

MT ANGEL, OR	TAPPING REQUIREMENTS, 1-1/2" AND LARGER SERVICE (NTS)	LAST REVISION DATE: SEPT 2013
DETAIL NO. 517		COPYRIGHT 1996 WESTECH ENGINEERING, INC.

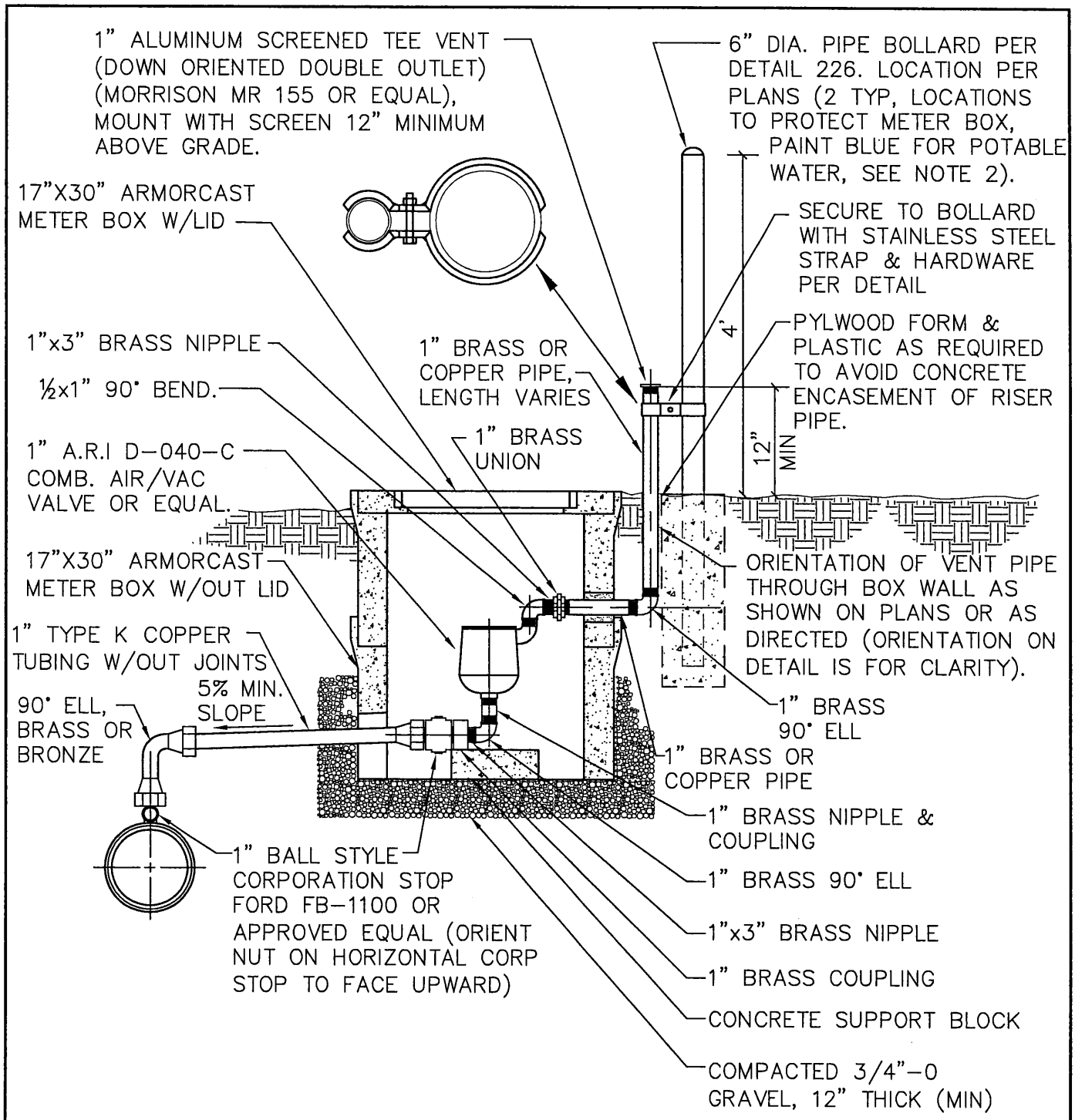

NOTES:

1. RISER SHALL BE PROTECTED FROM VEHICULAR OR PEDESTRIAN TRAFFIC AS APPROVED BY THE CITY ENGINEER & PUBLIC WORKS.
2. PAINT BOLLARD & TOP SAFETY BLUE FOR POTABLE WATER APPLICATIONS.
3. WHERE ARV ASSEMBLIES ARE INSTALLED ADJACENT TO FENCES, BOLLARDS SHALL BE SET 3" MIN CLEAR FROM FENCE UNLESS OTHERWISE APPROVED BY PROPERTY OWNER.
4. EXACT LOCATION OF RISER PENTRATION THROUGH BOX & BOLLARDS TO BE VERIFIED IN FIELD WITH CITY ENGINEER & PUBLIC WORKS PRIOR TO RISER & BOLLARD INSTALLATION.

LAST REVISION DATE: SEPT 2013	JO #
1" COMBINIATION AIR RELEASE VALVE (CARV) (NTS)	
MT ANGEL, OR	DETAIL NO. 518

NOTES:

1. METER VAULT & PIPING SHALL CONFORM TO REQUIREMENTS OF PUBLIC/PRIVATE AGENCIES HAVING JURISDICATION.
2. WATER METER & VAULT INSTALLATION SHALL MEET STATE OF OREGON, DEPARTMENT OF HUMAN RESOURCES, HEALTH DIVISION REQUIREMENTS.
3. ALL MATERIALS INCLUDING THE TEMPORARY SPOOL, SHALL BE FURNISHED & INSTALLED BY THE CONTRACTOR.
4. THE CONTRACTOR SHALL INSTALL A TEMPORARY SPACER SPOOL BETWEEN THE GATE VALVES SHOWN. THE TEMPORARY SPOOL SHALL MATCH THE LENGTH OF THE METER, INCLUDING THE STRAINER.
5. ALL M.J. CONNECTIONS SHALL BE ASSEMBLED WITH RETAINER GLANDS.
6. THE BYPASS PIPE SHALL BE THE SAME SIZE AS THE MAIN SERVICE PIPE OR A MIN OF 3", WHICHEVER IS LARGER.
7. METER INSTALLATIONS SHALL INCLUDE TEST PORTS AS AS REQUIRED BY THE PUBLIC/PRIVATE AGENCY HAVING JURISDICATION. UNLESS OTHERWISE REQUIRE BY AGENCY, TEST PORTS SHALL CONSIST OF SADDLES, I.P.xI.P. CORP STOPS & CAPS. CORP STOPS SHALL BE FORD MODEL FB500.
8. MAIN VALVES SHALL BE NON-RISING-STEM STYLE AND SHALL BE INSTALLED W/HAND WHEELS. HAND WHEELS SHALL MEET ALL REQUIREMENTS OF AWWA C509-94, SEC. 4.11.
9. ALL PIPE OPENINGS SHALL BE SEALED WITH NON-SHRINK WATERTIGHT GROUT.
10. BENDS, CROSSES AND TESS SHALL NOT BE INSTALLED WITHIN 5 FEET OF OUTSIDE OF VAULT WALL.
11. ALL VAULTS SHALL MEET OR EXCEED ASTM C-857. ALL CONC. TO BE 4500 PSI @ 28 DAYS. REBAR TO BE ASTM A-615 GRADE 60.
12. SUMP PUMP WITH POWER SUPPLY SHALL BE INSTALLED UNLESS OTHERWISE APPROVED BY ENGINEER OR GOVERNING JURISDICTION.
13. SUMP DISCHARGE SHALL BE PLUMBED TO GRAVITY STORM DRAIN PER UPC REQUIREMENTS.
14. SUMP PUMP POWER SHALL BE INSTALLED IN SCHEDULE 40 RIGID CONDUIT PER NEC REQUIREMENTS.
15. ALUMINUM ANGLE FRAME HATCH (3'0"x 5'6" MIN) SHALL BE BY SYRACUSE CASTINGS WEST OR APPROVED EQUAL (SAND BLASTED NON-SLIP).
    (1) TO BE 300 PSF PEDESTRIAN RATED EXKD-3666-RPC WHERE LID IS SET MIN. OF 9" ABOVE GRADE.
    (2) TO BE H-20 RATED ECHD-3666-RPC IF LID IS LESS THAN 9" ABOVE GRADE, OR IS IN TRAFFIC AREA.
16. OSHA APPROVED ALUMINUM SERRATED SAFETY RUNG LADDER & LADDER SAFETY POST BY SYRACUSE CASTINGS WEST, OR APPROVED EQUAL.

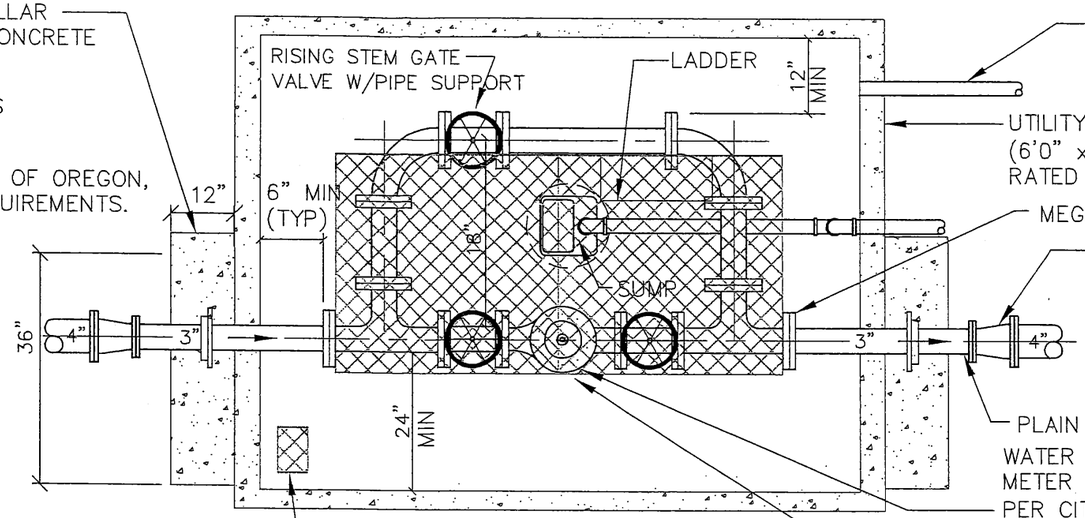

PLAN
NTS

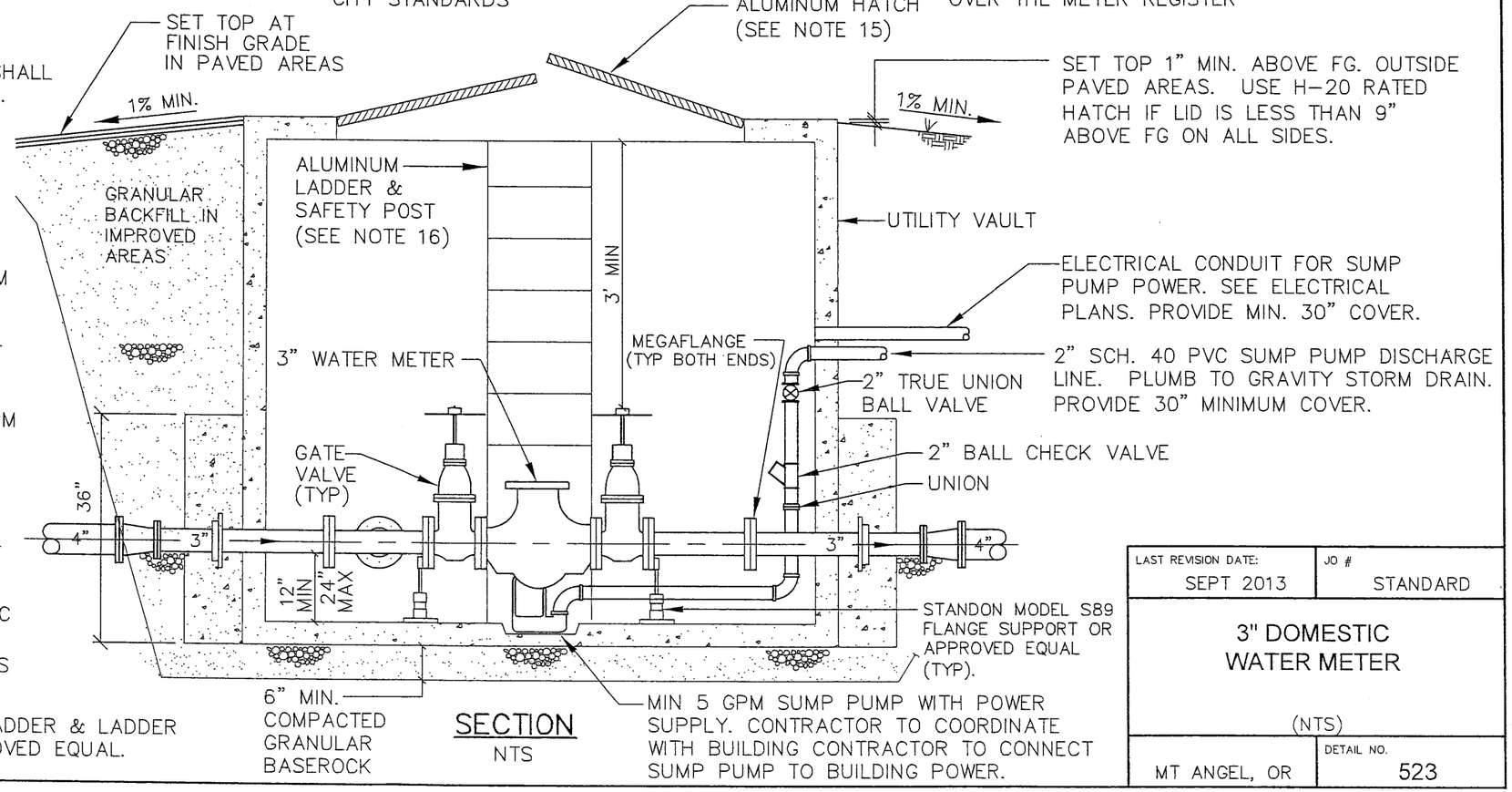

SECTION
NTS

LAST REVISION DATE: SEPT 2013	JO # STANDARD
3" DOMESTIC WATER METER (NTS)	
MT ANGEL, OR	DETAIL NO. 523

NOTES:

1. METER VAULT & PIPING SHALL CONFORM TO REQUIREMENTS OF PUBLIC/PRIVATE AGENCIES HAVING JURISDICATION.
2. WATER METER & VAULT INSTALLATION SHALL MEET STATE OF OREGON, DEPARTMENT OF HUMAN RESOURCES, HEALTH DIVISION REQUIREMENTS.
3. ALL MATERIALS INCLUDING THE TEMPORARY SPOOL, SHALL BE FURNISHED & INSTALLED BY THE CONTRACTOR.
4. THE CONTRACTOR SHALL INSTALL A TEMPORARY SPACER SPOOL BETWEEN THE GATE VALVES SHOWN. THE TEMPORARY SPOOL SHALL MATCH THE LENGTH OF THE METER, INCLUDING THE STRAINER.
5. ALL M.J. CONNECTIONS SHALL BE ASSEMBLED WITH RETAINER GLANDS.
6. THE BYPASS PIPE SHALL BE THE SAME SIZE AS THE MAIN SERVICE PIPE OR A MIN OF 3", WHICHEVER IS LARGER.
7. METER INSTALLATIONS SHALL INCLUDE TEST PORTS AS AS REQUIRED BY THE PUBLIC/PRIVATE AGENCY HAVING JURISDICATION. UNLESS OTHERWISE REQUIRE BY AGENCY, TEST PORTS SHALL CONSIST OF SADDLES, I.P.xI.P. CORP STOPS & CAPS. CORP STOPS SHALL BE FORD MODEL FB500.
8. MAIN VALVES SHALL BE NON-RISING-STEM STYLE AND SHALL BE INSTALLED W/HAND WHEELS. HAND WHEELS SHALL MEET ALL REQUIREMENTS OF AWWA C509-94, SEC. 4.11.
9. ALL PIPE OPENINGS SHALL BE SEALED WITH NON-SHRINK WATERTIGHT GROUT.
10. BENDS, CROSSES AND TESS SHALL NOT BE INSTALLED WITHIN 5 FEET OF OUTSIDE OF VAULT WALL.
11. ALL VAULTS SHALL MEET OR EXCEED ASTM C-857. ALL CONC. TO BE 4500 PSI @ 28 DAYS. REBAR TO BE ASTM A-615 GRADE 60.
12. SUMP PUMP WITH POWER SUPPLY SHALL BE INSTALLED UNLESS OTHERWISE APPROVED BY ENGINEER OR GOVERNING JURISDICTION.
13. SUMP DISCHARGE SHALL BE PLUMBED TO GRAVITY STORM DRAIN PER UPC REQUIREMENTS.
14. SUMP PUMP POWER SHALL BE INSTALLED IN SCHEDULE 40 RIGID CONDUIT PER NEC REQUIREMENTS.
15. ALUMINUM ANGLE FRAME HATCH (3'0"x 5'6" MIN) SHALL BE BY SYRACUSE CASTINGS WEST OR APPROVED EQUAL (SAND BLASTED NON-SLIP).
    (1) TO BE 300 PSF PEDESTRIAN RATED EXKD-3666-RPC WHERE LID IS SET MIN. OF 9" ABOVE GRADE.
    (2) TO BE H-20 RATED ECHD-3666-RPC IF LID IS LESS THAN 9" ABOVE GRADE, OR IS IN TRAFFIC AREA.
16. OSHA APPROVED ALUMINUM SERRATED SAFETY RUNG LADDER & LADDER SAFETY POST BY SYRACUSE CASTINGS WEST, OR APPROVED EQUAL.

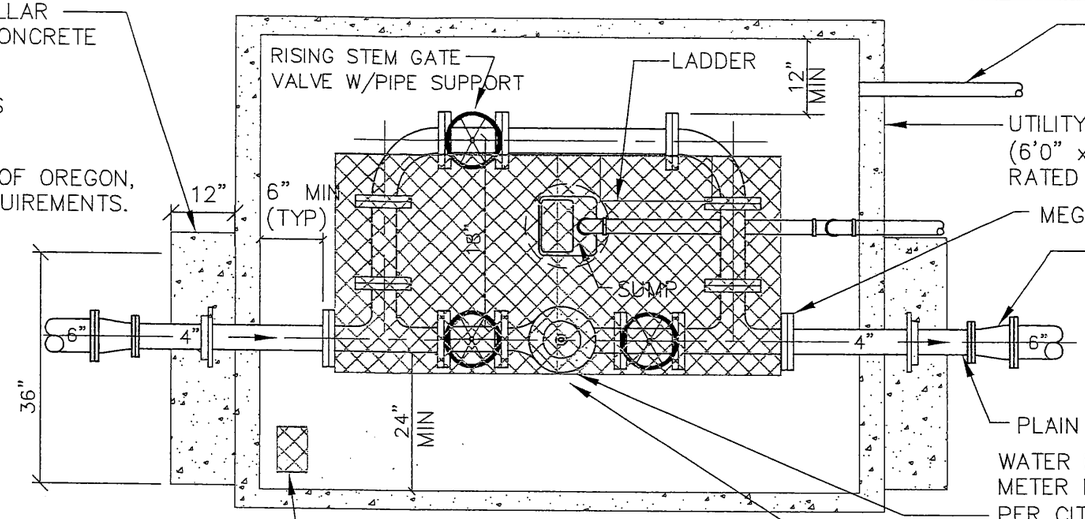

PLAN
NTS

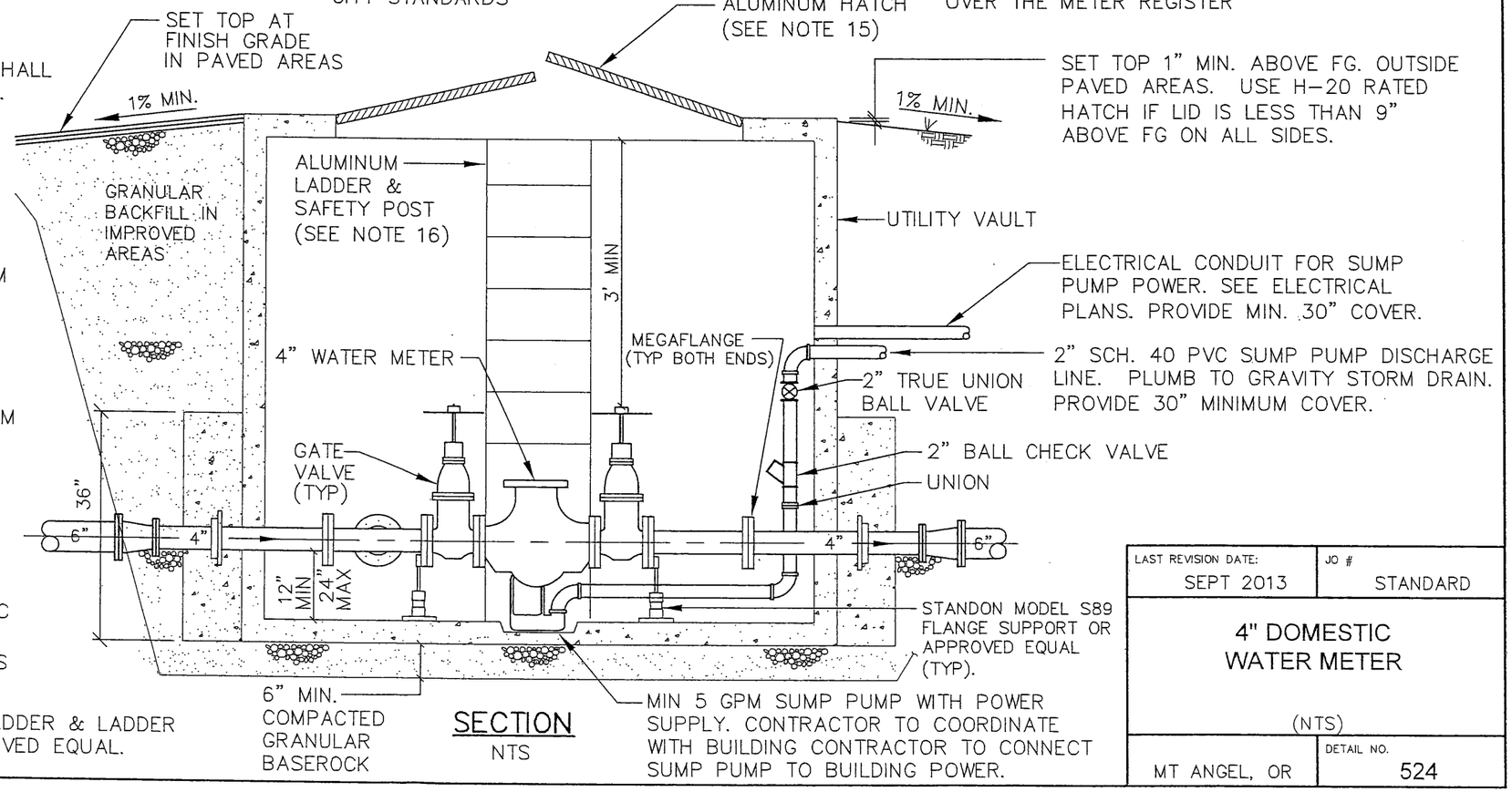

SECTION
NTS

LAST REVISION DATE: SEPT 2013	JO # STANDARD
4" DOMESTIC WATER METER (NTS)	
MT ANGEL, OR	DETAIL NO. 524

RPBA DIAMETER	HOT BOX MODEL
1"	HB1
1½"	HB1
2"	HB1.5

NOTE: VERIFY HB SIZE FOR OTHER MODEL RPBA DEVICES.

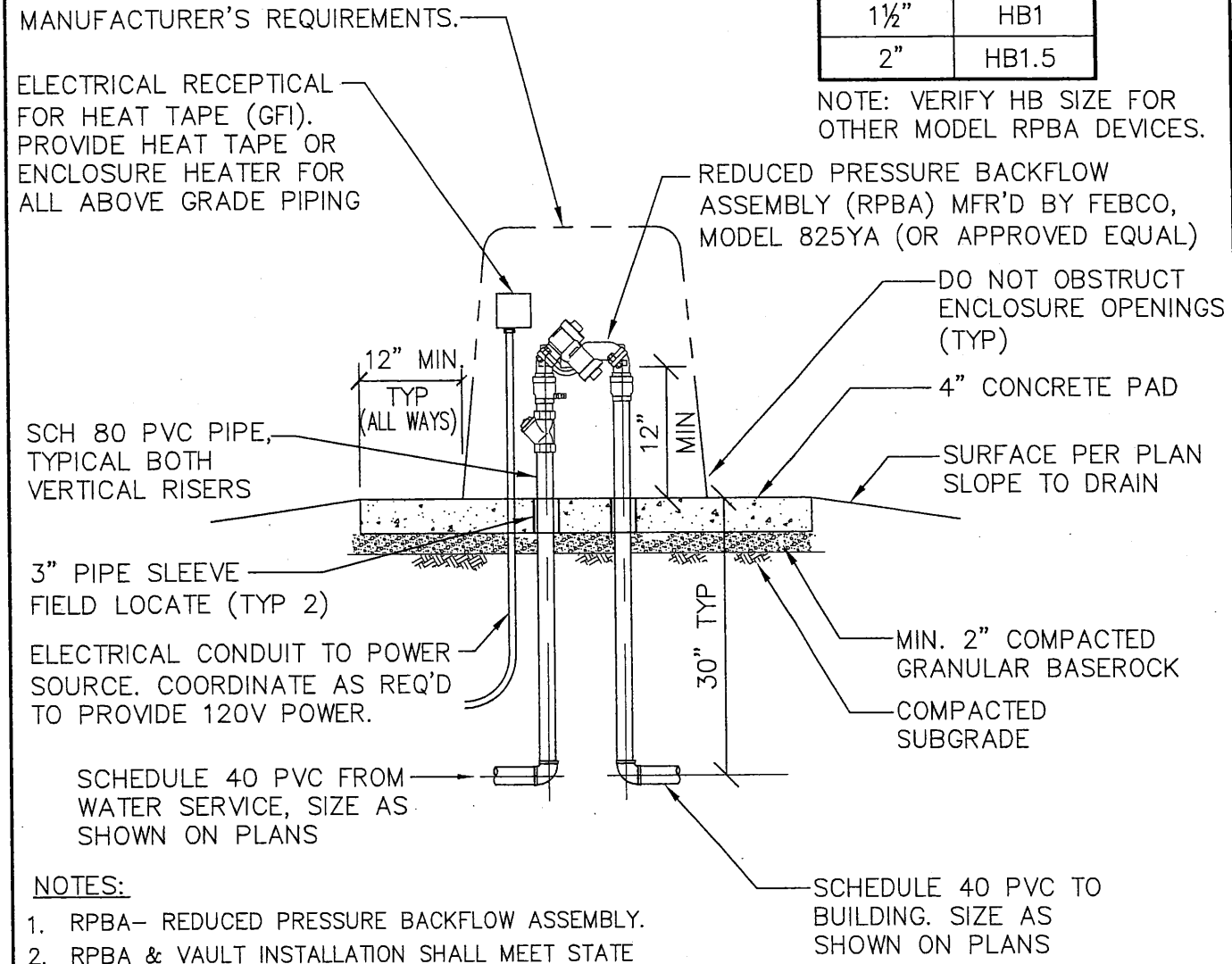

NOTES:

1. RPBA– REDUCED PRESSURE BACKFLOW ASSEMBLY.
2. RPBA & VAULT INSTALLATION SHALL MEET STATE OF OREGON, DEPARTMENT OF HUMAN RESOURCES, HEALTH DIVISION REQUIREMENTS.
3. CONTRACTOR SHALL HAVE RPBA TESTED AND CERTIFIED PRIOR TO APPROVAL BY THE CITY.
4. RPBA & VAULT SHALL CONFORM TO REQUIREMENTS OF PUBLIC/PRIVATE AGENCIES HAVING JURISDICTION.
5. VAULTS SHALL HAVE A MINIMUM OF 3' CLEARANCE FROM ALL OTHER VAULTS OR STRUCTURES.
6. VERIFY ENCLOSURE DIMENSIONS ARE ADEQUATE FOR CLEARANCE BASED ON HEIGHT OF REDUCED PRESSURE ASSEMBLY.
7. ENCLOSURE SHALL BE CENTERED OVER THE COMPLETED REDUCED PRESSURE BACKFLOW ASSEMBLY.
8. POWER SHALL BE INSTALLED IN SCHEDULE 40 RIGID CONDUIT PER NEC REQUIREMENTS.
9. ALL CONCRETE SHALL HAVE 3,300 PSI COMPRESSIVE STRENGTH @ 28 DAYS.
10. HOT BOX DRAINAGE OPENINGS SHALL NOT BE OBSTRUCTED BY GRADING OR PLANTINGS.
11. RPBA SHALL BE INSTALLED A MIN. OF 12 INCHES ABOVE THE 100–YEAR FLOOD ELEVATION AS DETERMINED BY FEMA.

LAST REVISION DATE: SEPT 2013	JO # STANDARD
2" AND SMALLER REDUCED PRESSURE BACKFLOW ASSEMBLY (NTS)	
MT ANGEL, OR	DETAIL NO. 541

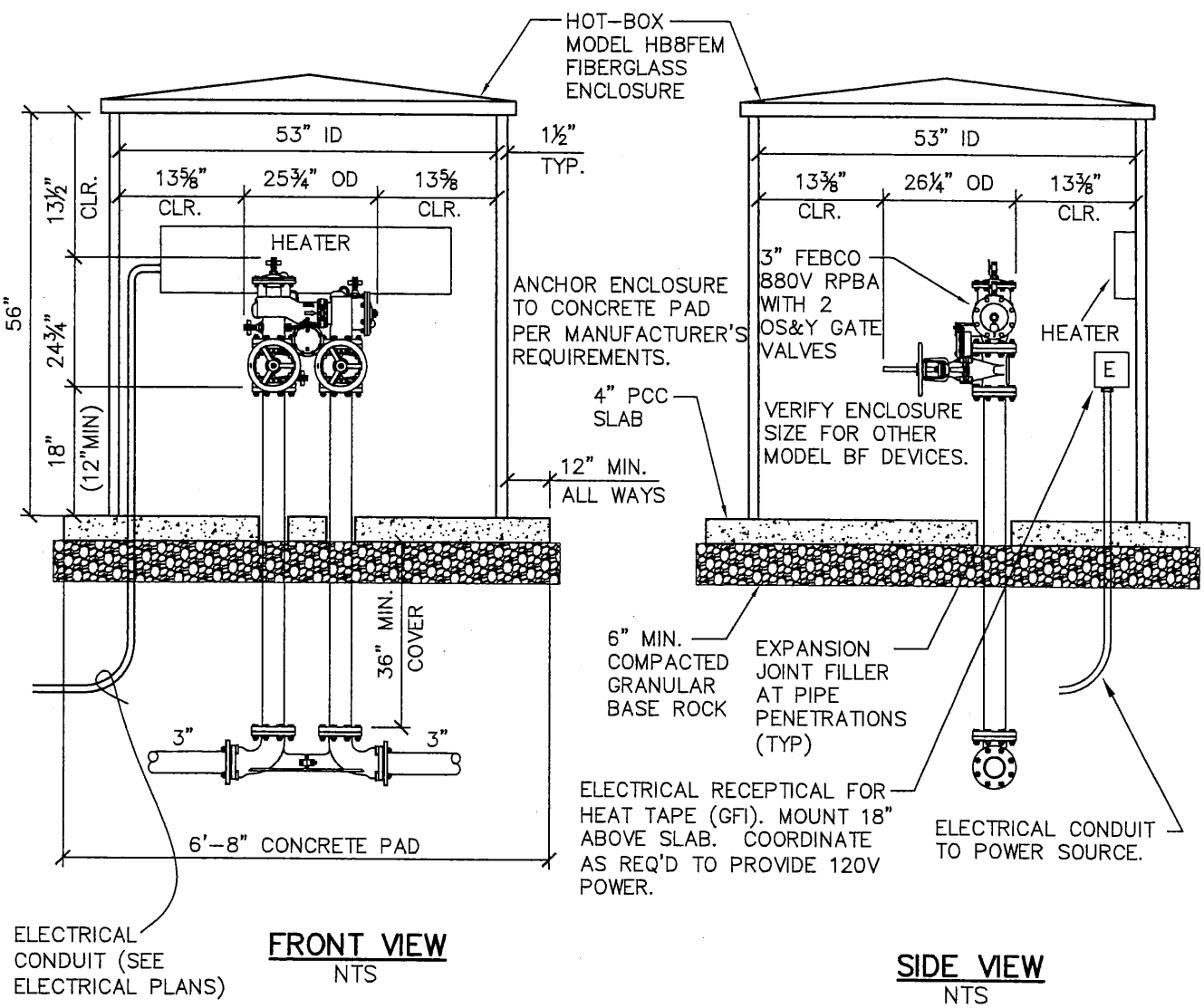

FRONT VIEW
NTS

SIDE VIEW
NTS

NOTES:

1. RPBA– REDUCED PRESSURE BACKFLOW ASSEMBLY.
2. RPBA & VAULT INSTALLATION SHALL MEET STATE OF OREGON, DEPARTMENT OF HUMAN RESOURCES, HEALTH DIVISION REQUIREMENTS.
3. CONTRACTOR SHALL HAVE RPBA TESTED AND CERTIFIED PRIOR TO APPROVAL BY THE CITY.
4. RPBA & VAULT SHALL CONFORM TO REQUIREMENTS OF PUBLIC/PRIVATE AGENCIES HAVING JURISDICTION.
5. VAULTS SHALL HAVE A MINIMUM OF 3' CLEARANCE FROM ALL OTHER VAULTS OR STRUCTURES.
6. VERIFY ENCLOSURE DIMENSIONS ARE ADEQUATE FOR CLEARANCE BASED ON HEIGHT OF REDUCED PRESSURE ASSEMBLY.
7. ENCLOSURE SHALL BE CENTERED OVER THE COMPLETED REDUCED PRESSURE BACKFLOW ASSEMBLY.
8. POWER SHALL BE INSTALLED IN SCHEDULE 40 RIGID CONDUIT PER NEC REQUIREMENTS.
9. ALL CONCRETE SHALL HAVE 3,300 PSI COMPRESSIVE STRENGTH @ 28 DAYS.
10. HOT BOX DRAINAGE OPENINGS SHALL NOT BE OBSTRUCTED BY GRADING OR PLANTINGS.
11. RPBA SHALL BE INSTALLED A MIN. OF 12 INCHES ABOVE THE 100-YEAR FLOOD ELEVATION AS DETERMINED BY FEMA.
12. FINISH GRADE TO SLOPE AWAY FROM VAULT AT MIN. SLOPE = 2%

LAST REVISION DATE: SEPT 2013	JO #
3" REDUCED PRESSURE ASSEMBLY (NTS)	
MT ANGEL, OR	DETAIL NO. 543

MODEL NO. HB4E AS MANUFACTURED BY HOT BOX (1-800-736-0238)

ANCHOR ENCLOSURE TO CONCRETE PAD PER MANUFACTURER'S REQUIREMENTS.

NOTE: VERIFY VAULT SIZE FOR OTHER MODEL BF DEVICES.

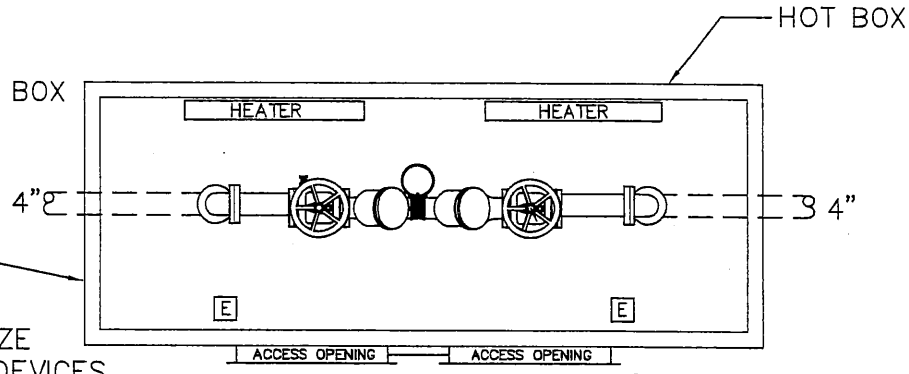

PLAN
NTS

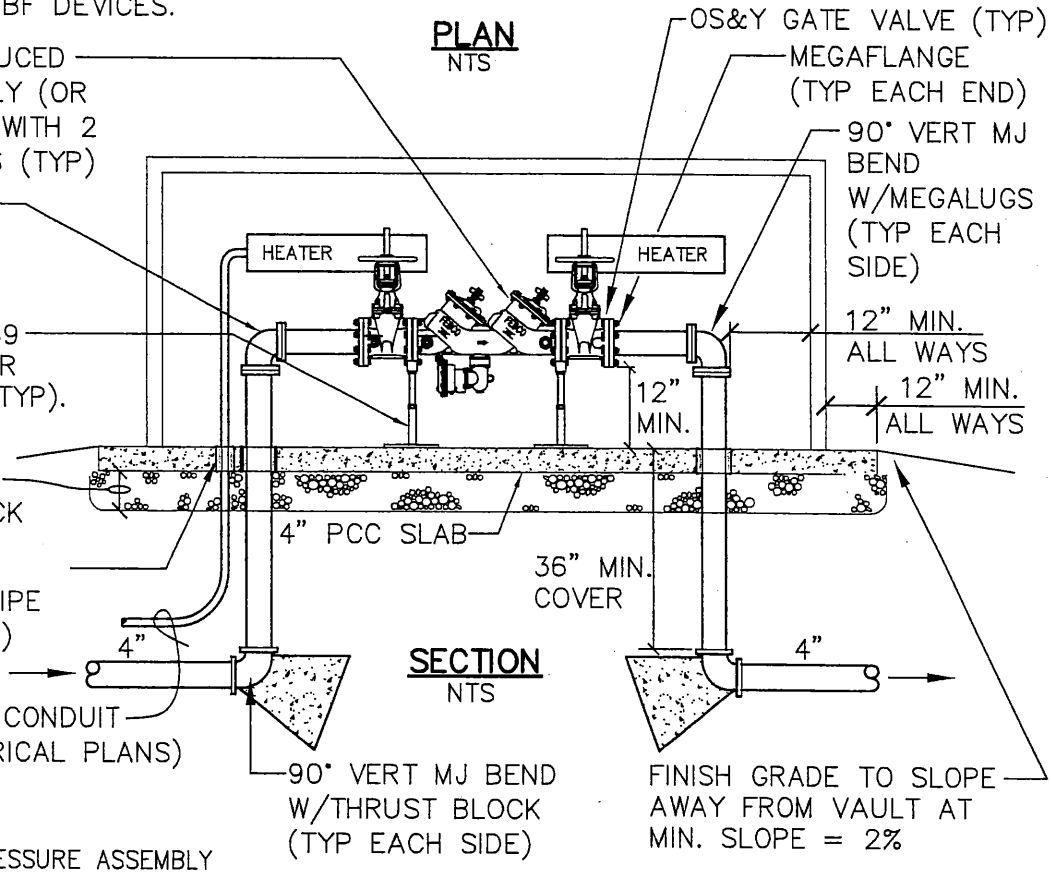

SECTION
NTS

NOTES:

1. RPA- REDUCED PRESSURE ASSEMBLY
2. RPA & VAULT INSTALLATION SHALL MEET STATE OF OREGON, DEPARTMENT OF HUMAN RESOURCES, HEALTH DIVISION REQUIREMENTS.
3. CONTRACTOR SHALL HAVE RPA TESTED AND CERTIFIED PRIOR TO APPROVAL BY THE CITY.
4. RPA & VAULT SHALL CONFORM TO REQUIREMENTS OF PUBLIC/PRIVATE AGENCIES HAVING JURISDICTION.
5. VAULTS SHALL HAVE A MINIMUM OF 3' CLEARANCE FROM ALL OTHER VAULTS OR STRUCTURES.
6. VERIFY ENCLOSURE DIMENSIONS ARE ADEQUATE FOR CLEARANCE BASED ON HEIGHT OF REDUCED PRESSURE ASSEMBLY.
7. ENCLOSURE SHALL BE CENTERED OVER THE COMPLETED REDUCED PRESSURE ASSEMBLY.
8. POWER SHALL BE INSTALLED IN SCHEDULE 40 RIGID CONDUIT PER NEC REQUIREMENTS.
9. 'E' INDICATES THE ELECTRICAL RECEPTACLE. IT SHALL BE MOUNTED A MIN. OF 18" ABOVE THE SLAB.
10. ALL CONCRETE SHALL HAVE 3,300 PSI COMPRESSIVE STRENGTH @ 28 DAYS.
11. HOT BOX DRAINAGE OPENINGS SHALL NOT BE OBSTRUCTED BY GRADING OR PLANTINGS.
12. RPA SHALL BE INSTALLED A MIN. OF 12 INCHES ABOVE THE 100-YEAR FLOOD ELEVATION AS DETERMINED BY FEMA.

LAST REVISION DATE: SEPT 2013	JO # STANDARD
4" REDUCED PRESSURE ASSEMBLY (NTS)	
MT ANGEL, OR	DETAIL NO. 544

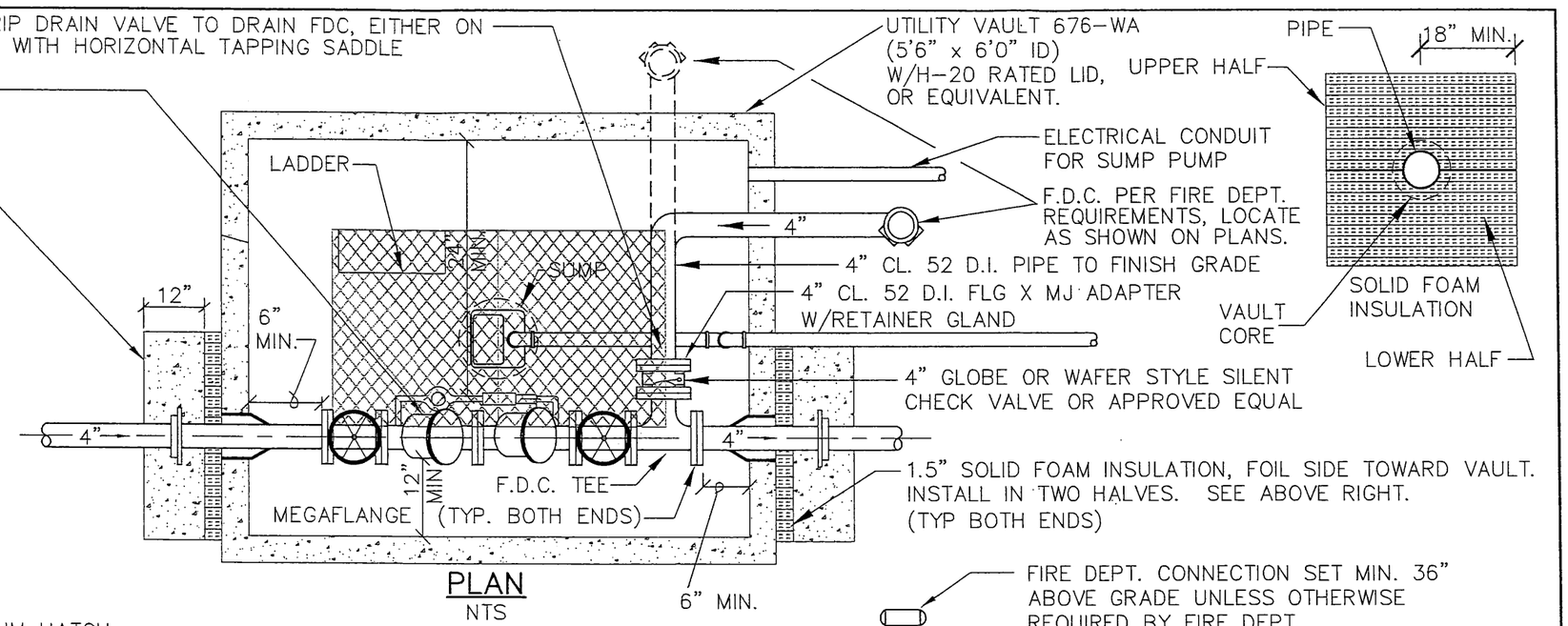

PLAN
NTS

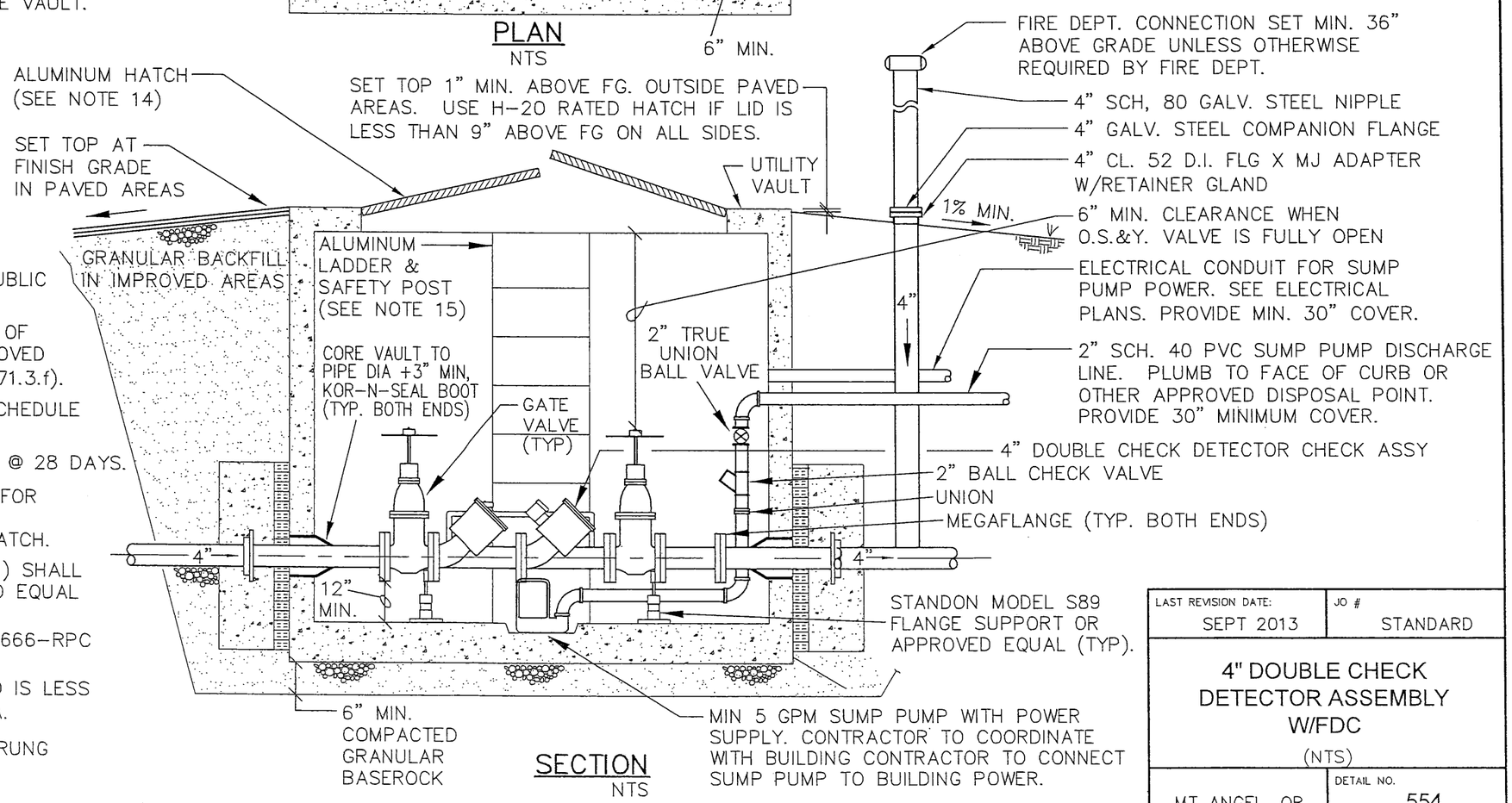

SECTION
NTS

NOTES:

1. DCDA- DOUBLE CHECK DETECTOR ASSEMBLY FDC-FIRE DEPARTMENT CONNECTION.
2. DCDA SHALL CONFORM TO REQUIREMENTS OF PUBLIC/PRIVATE AGENCIES HAVING JURISDICTION.
3. DCDA & VAULT INSTALLATION SHALL MEET STATE OF OREGON, DEPARTMENT OF HUMAN RESOURCES, HEALTH DIVISION REQUIREMENTS.
4. CONTRACTOR SHALL HAVE DCDA TESTED AND CERTIFIED PRIOR TO ACCEPTANCE BY OWNER.
5. FDC SHALL NOT EXIT THROUGH THE TOP OF THE VAULT.
6. ALL PIPE OPENINGS SHALL BE SEALED WITH NON-SHRINK WATERTIGHT GROUT.
7. BENDS, CROSSES AND TEES SHALL NOT BE INSTALLED WITHIN 5 FEET OF THE OUTSIDE VAULT WALL.
8. ALL VAULTS SHALL MEET OR EXCEED ASTM C-857. ALL VAULT CONCRETE TO BE 4500 PSI @ 28 DAYS. REBAR TO BE ASTM A-615 GRADE 60.
9. SUMP PUMP WITH POWER SUPPLY SHALL BE INSTALLED UNLESS OTHERWISE APPROVED BY PUBLIC WORKS.
10. SUMP DISCHARGE SHALL BE PLUMBED TO FACE OF STREET CURB OR OTHER DISPOSAL POINT APPROVED BY LOCAL JURISDICTION (SEE OAR 333-061-0071.3.f).
11. SUMP PUMP POWER SHALL BE INSTALLED IN SCHEDULE 40 RIGID CONDUIT PER NEC REQUIREMENTS.
12. THRUST COLLAR CONCRETE SHALL BE 3300 PSI @ 28 DAYS.
13. PROVIDE REMOTE READER (TOUCH READ HEAD) FOR DETECTOR LOOP PER LOCAL JURISDICTION REQUIREMENTS, MOUNTED ON HINGE EDGE OF HATCH.
14. ALUMINUM ANGLE FRAME HATCH (3'0"x 5'6" MIN) SHALL BE BY SYRACUSE CASTINGS WEST OR APPROVED EQUAL (SAND BLASTED NON-SLIP).
    (1) TO BE 300 PSF PEDESTRIAN RATED EXKD-3666-RPC WHERE LID IS SET MIN. OF 9" ABOVE GRADE.
    (2) TO BE H-20 RATED ECHD-3666-RPC IF LID IS LESS THAN 9" ABOVE GRADE, OR IS IN TRAFFIC AREA.
15. OSHA APPROVED ALUMINUM SERRATED SAFETY RUNG LADDER & LADDER SAFETY POST BY SYRACUSE CASTINGS WEST, OR APPROVED EQUAL.

LAST REVISION DATE:	JO #
SEPT 2013	STANDARD

4" DOUBLE CHECK DETECTOR ASSEMBLY W/FDC
(NTS)

MT ANGEL, OR	DETAIL NO. 554

6" FEBCO 856 DOUBLE CHECK DETECTOR ASSEMBLY WITH 2 OS&Y GATE VALVES, OR APPROVED EQUAL.

CAST-IN-PLACE CONCRETE THRUST COLLAR WITH RETAINER GLAND CENTERED IN CONCRETE (TYPICAL BOTH ENDS)

NOTES:

1. DCDA- DOUBLE CHECK DETECTOR ASSEMBLY FDC-FIRE DEPARTMENT CONNECTION.
2. DCDA SHALL CONFORM TO REQUIREMENTS OF PUBLIC/PRIVATE AGENCIES HAVING JURISDICTION.
3. DCDA & VAULT INSTALLATION SHALL MEET STATE OF OREGON, DEPARTMENT OF HUMAN RESOURCES, HEALTH DIVISION REQUIREMENTS.
4. CONTRACTOR SHALL HAVE DCDA TESTED AND CERTIFIED PRIOR TO ACCEPTANCE BY OWNER.
5. FDC SHALL NOT EXIT THROUGH THE TOP OF THE VAULT.
6. ALL PIPE OPENINGS SHALL BE SEALED WITH NON-SHRINK WATERTIGHT GROUT.
7. BENDS, CROSSES AND TEES SHALL NOT BE INSTALLED WITHIN 5 FEET OF THE OUTSIDE VAULT WALL.
8. ALL VAULTS SHALL MEET OR EXCEED ASTM C-857. ALL VAULT CONCRETE TO BE 4500 PSI @ 28 DAYS. REBAR TO BE ASTM A-615 GRADE 60.
9. SUMP PUMP WITH POWER SUPPLY SHALL BE INSTALLED UNLESS OTHERWISE APPROVED BY PUBLIC WORKS.
10. SUMP DISCHARGE SHALL BE PLUMBED TO FACE OF STREET CURB OR OTHER DISPOSAL POINT APPROVED BY LOCAL JURISDICTION (SEE OAR 333-061-0071.3.f).
11. SUMP PUMP POWER SHALL BE INSTALLED IN SCHEDULE 40 RIGID CONDUIT PER NEC REQMNTS.
12. THRUST COLLAR CONCRETE SHALL BE 3300 PSI @ 28 DAYS.
13. PROVIDE REMOTE READER (TOUCH READ HEAD) FOR DETECTOR LOOP PER LOCAL JURISDICTION REQUIREMENTS, MOUNTED ON HINGE EDGE OF HATCH.
14. ALUMINUM ANGLE FRAME HATCH (3'0"x 5'6" MIN) SHALL BE BY SYRACUSE CASTINGS WEST OR APPROVED EQUAL (SAND BLASTED NON-SLIP). (1) TO BE 300 PSF PEDESTRIAN RATED EXKD-3666-RPC WHERE LID IS SET MIN. OF 9" ABOVE GRADE. (2) TO BE H-20 RATED ECHD-3666-RPC IF LID IS LESS THAN 9" ABOVE GRADE, OR IS IN TRAFFIC AREA.
15. OSHA APPROVED ALUMINUM SERRATED SAFETY RUNG LADDER & LADDER SAFETY POST BY SYRACUSE CASTINGS WEST, OR APPROVED EQUAL.

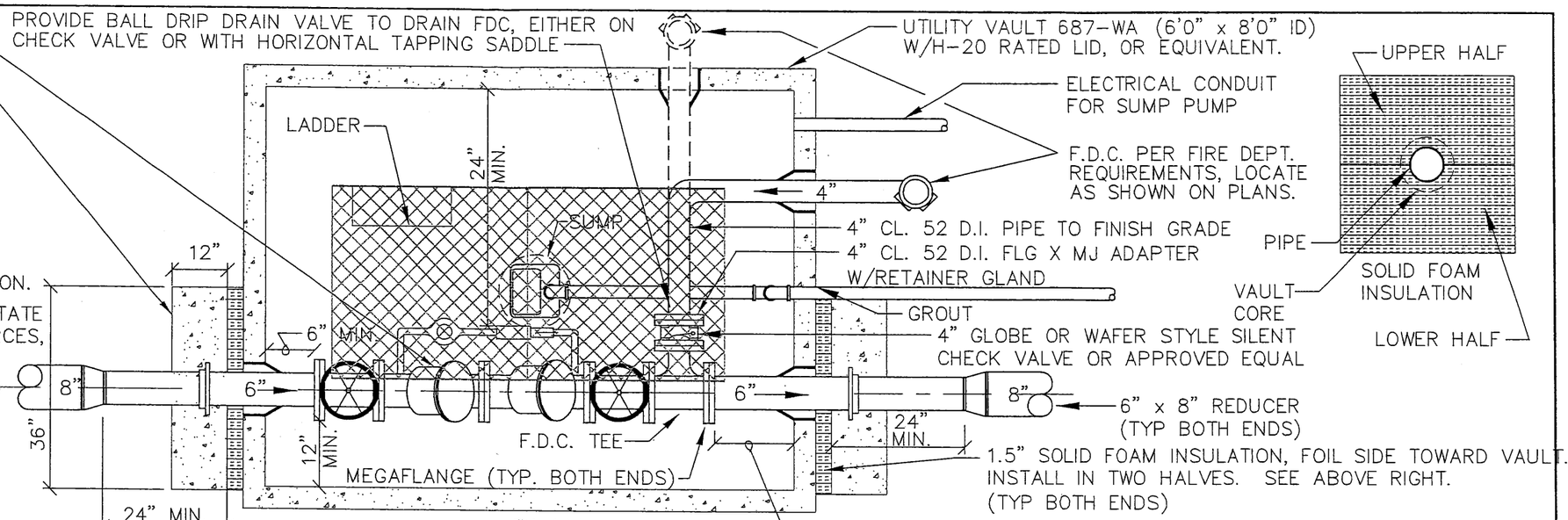

PLAN
NTS

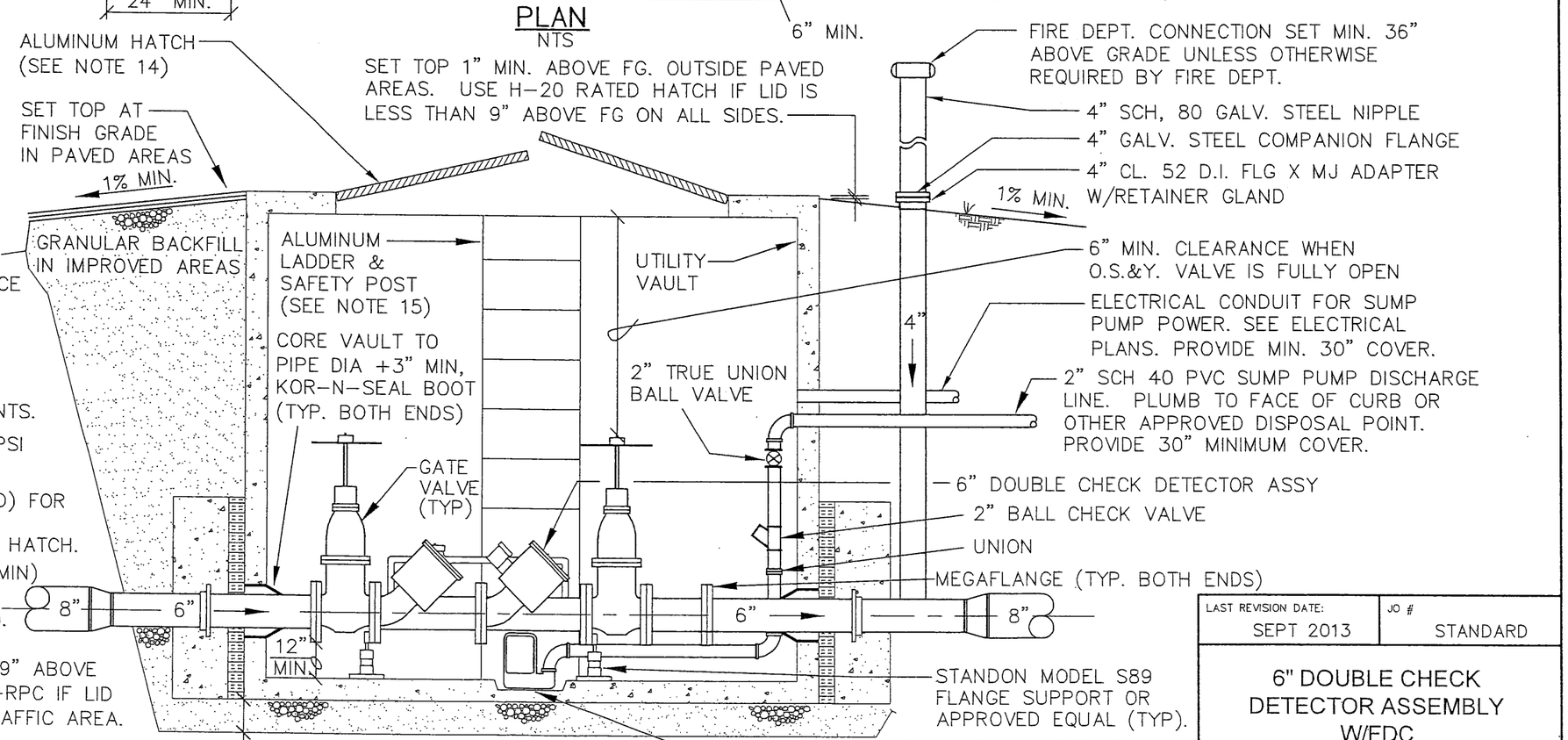

SECTION
NTS

LAST REVISION DATE: SEPT 2013	JO # STANDARD
6" DOUBLE CHECK DETECTOR ASSEMBLY W/FDC (NTS)	
MT ANGEL, OR	DETAIL NO. 555

8" FEBCO 856 DOUBLE CHECK DETECTOR ASSEMBLY WITH 2 OS&Y GATE VALVES, OR APPROVED EQUAL.

CAST-IN-PLACE CONCRETE THRUST COLLAR WITH RETAINER GLAND CENTERED IN CONCRETE (TYPICAL BOTH ENDS)

NOTES:

1. DCDA- DOUBLE CHECK DETECTOR ASSEMBLY FDC-FIRE DEPARTMENT CONNECTION.
2. DCDA SHALL CONFORM TO REQUIREMENTS OF PUBLIC/PRIVATE AGENCIES HAVING JURISDICTION.
3. DCDA & VAULT INSTALLATION SHALL MEET STATE OF OREGON, DEPARTMENT OF HUMAN RESOURCES, HEALTH DIVISION REQUIREMENTS.
4. CONTRACTOR SHALL HAVE DCDA TESTED AND CERTIFIED PRIOR TO ACCEPTANCE BY OWNER.
5. FDC SHALL NOT EXIT THROUGH THE TOP OF THE VAULT.
6. ALL PIPE OPENINGS SHALL BE SEALED WITH KOH-N-SEAL RUBBER BOOTS, EXCEPT AS NOTED.
7. BENDS, CROSSES AND TEES SHALL NOT BE INSTALLED WITHIN 5 FEET OF THE OUTSIDE VAULT WALL.
8. ALL VAULTS SHALL MEET OR EXCEED ASTM C-857. ALL VAULT CONCRETE TO BE 4500 PSI @ 28 DAYS. REBAR TO BE ASTM A-615 GRADE 60.
9. SUMP PUMP WITH POWER SUPPLY SHALL BE INSTALLED UNLESS OTHERWISE APPROVED BY PUBLIC WORKS.
10. SUMP DISCHARGE SHALL BE PLUMBED TO FACE OF STREET CURB OR OTHER DISPOSAL POINT APPROVED BY LOCAL JURISDICTION (SEE OAR 333-061-0071.3.f).
11. SUMP PUMP POWER SHALL BE INSTALLED IN SCHEDULE 40 RIGID CONDUIT PER NEC REQMNTS.
12. THRUST COLLAR CONCRETE SHALL BE 3300 PSI @ 28 DAYS.
13. PROVIDE REMOTE READER (TOUCH READ HEAD) FOR DETECTOR LOOP PER LOCAL JURISDICTION REQUIREMENTS, MOUNTED ON HINGE EDGE OF HATCH.
14. ALUMINUM ANGLE FRAME HATCH (3'0"x 5'6" MIN) SHALL BE BY SYRACUSE CASTINGS WEST OR APPROVED EQUAL (SAND BLASTED NON-SLIP). (1) TO BE 300 PSF PEDESTRIAN RATED EXKD-3666-RPC WHERE LID IS SET MIN. OF 9" ABOVE GRADE. (2) TO BE H-20 RATED ECHD-3666-RPC IF LID IS LESS THAN 9" ABOVE GRADE, OR IS IN TRAFFIC AREA.
15. OSHA APPROVED ALUMINUM SERRATED SAFETY RUNG LADDER & LADDER SAFETY POST BY SYRACUSE CASTINGS WEST, OR APPROVED EQUAL.

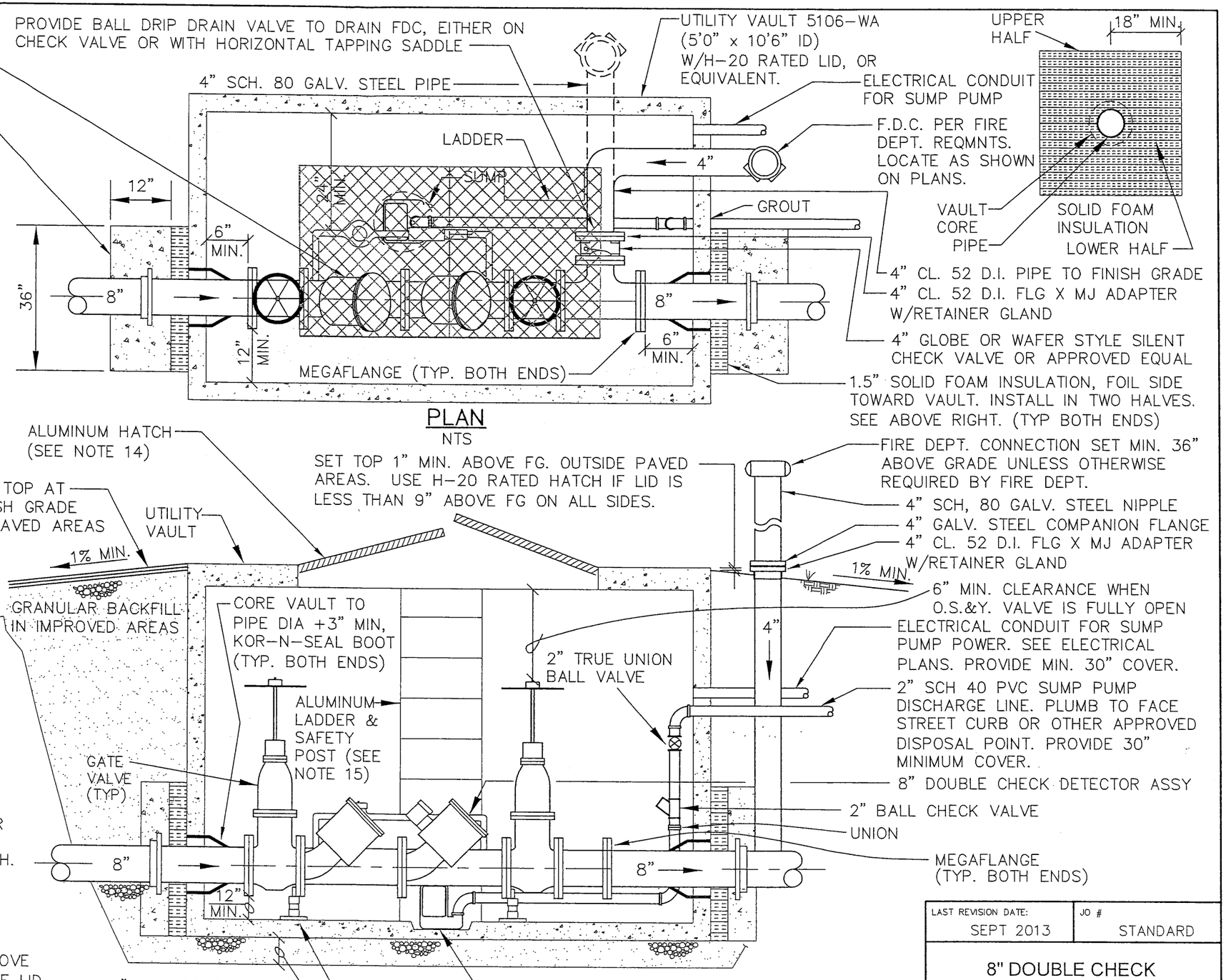

LAST REVISION DATE: SEPT 2013	JO # STANDARD
8" DOUBLE CHECK DETECTOR ASSEMBLY W/FDC (NTS)	
MT ANGEL, OR	DETAIL NO. 556

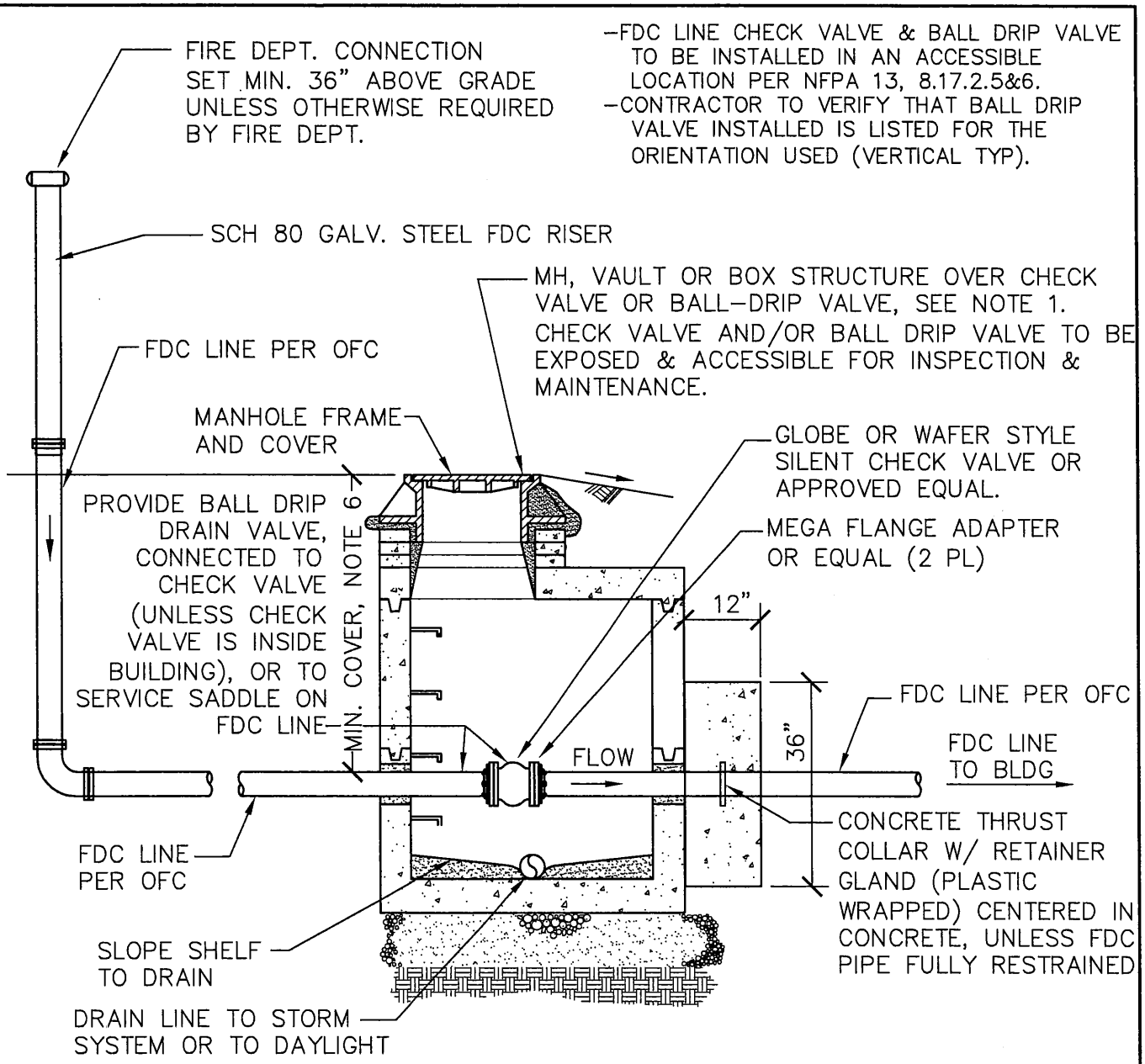

NOTES:

1. INSTALL 48" PRECAST MANHOLE PER DETAIL 402, UNLESS OTHER APPROVED VAULT OR BOX IS SHOWN OR NOTED ON DWGS.
2. ALL PIPE OPENINGS SHALL BE SEALED WITH NON-SHRINK WATERTIGHT GROUT.
3. WHERE REQUIRED, THRUST COLLAR CONCRETE SHALL BE 3300 PSI @ 28 DAYS.
4. IF AN FDC LINE CHECK VALVE IS PROVIDED INSIDE BUILDING, AN EXTERIOR FDC LINE CHECK VALVE IS NOT REQUIRED UNLESS OTHERWISE DIRECTED IN WRITING BY FIRE CODE OFFICIAL. BALL DRIP DRAIN VALVE SHALL BE INSTALLED ON CHECK VALVE OR AT LOW POINT ON FDC LINE (DETAIL 562) TO DRAIN FDC LINE BETWEEN CHECK VALVE & FDC RISER.
5. PER NFPA 13, A10.4.1, 36" MIN COVER REQUIRED FOR "WET" FDC LINES (ANY PORTION OF FDC LINE WHICH REMAINS FILLED WHEN NOT IN USE). COVER MAY BE REDUCED TO 12" MIN ON "DRY" FDC LINE WHICH IS DRAINED COMPLETELY WHEN NOT IN USE.
6. THIS DETAIL DOES NOT SUPERCEDE REQUIREMENTS UNDER THE OREGON FIRE CODE, NFPA STANDARDS OR DIRECTION FROM FIRE CHIEF.

LAST REVISION DATE: OCT 2013	JO # STANDARD
BELOW GRADE CHECK VALVE & BALL DRIP VALVE, IN CLOSE BOTTOM DRAIN STRUCT (NTS)	
MT ANGEL, OR	DETAIL NO. 560

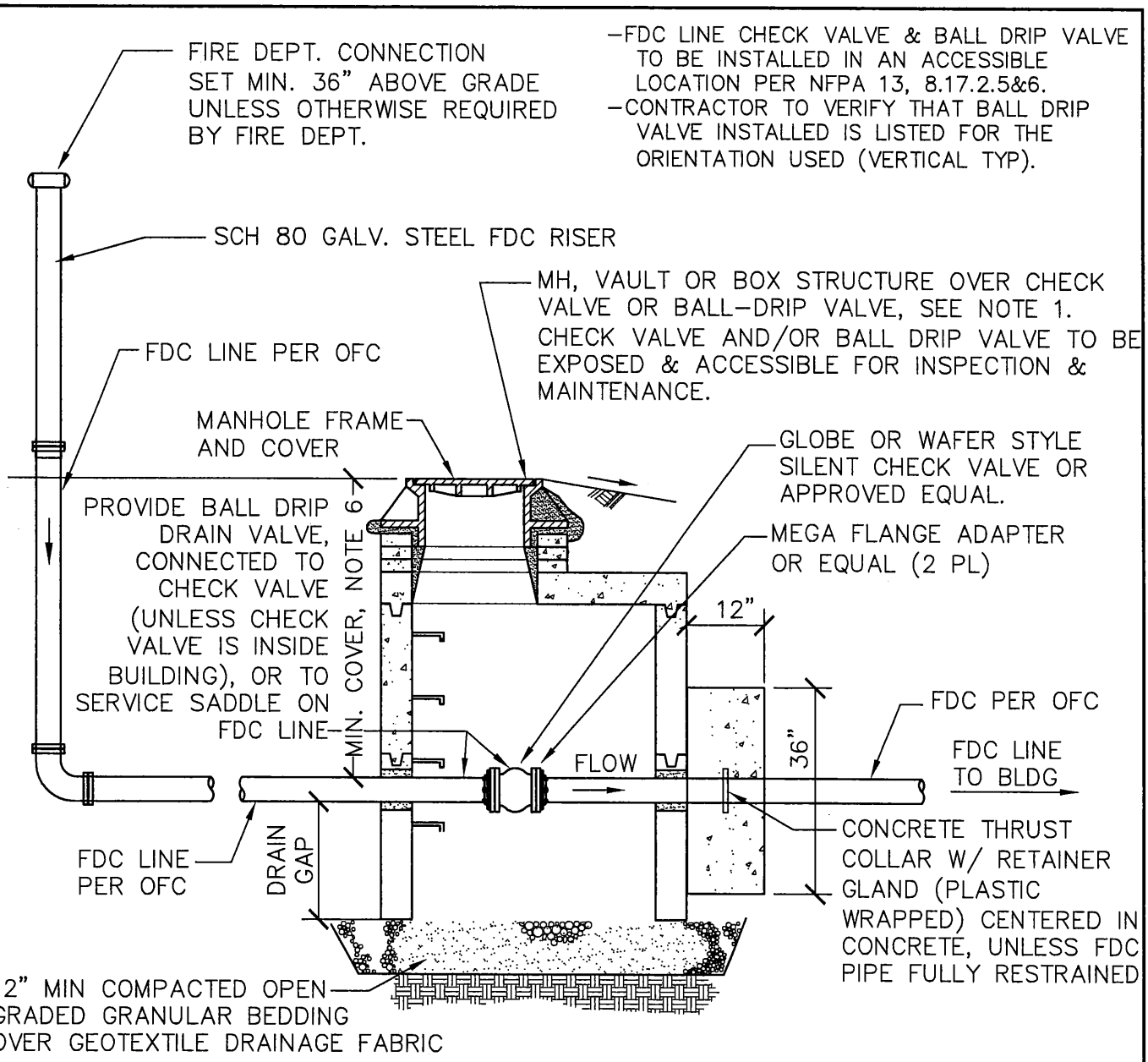

NOTES:

1. INSTALL 48" PRECAST MANHOLE PER DETAIL 402, UNLESS OTHER APPROVED VAULT OR BOX IS SHOWN OR NOTED ON DWGS.
2. ALL PIPE OPENINGS SHALL BE SEALED WITH NON-SHRINK WATERTIGHT GROUT.
3. WHERE REQUIRED, THRUST COLLAR CONCRETE SHALL BE 3300 PSI @ 28 DAYS.
4. IF AN FDC LINE CHECK VALVE IS PROVIDED INSIDE BUILDING, AN EXTERIOR FDC LINE CHECK VALVE IS NOT REQUIRED UNLESS OTHERWISE DIRECTED IN WRITING BY FIRE CODE OFFICIAL. BALL DRIP DRAIN VALVE SHALL BE INSTALLED ON CHECK VALVE OR AT LOW POINT ON FDC LINE (DETAIL 562) TO DRAIN FDC LINE BETWEEN CHECK VALVE & FDC RISER.
5. PER NFPA 13, A10.4.1, 36" MIN COVER REQUIRED FOR "WET" FDC LINES (ANY PORTION OF FDC LINE WHICH REMAINS FILLED WHEN NOT IN USE). COVER MAY BE REDUCED TO 12" MIN ON "DRY" FDC LINE WHICH IS DRAINED COMPLETELY WHEN NOT IN USE.
6. THIS DETAIL DOES NOT SUPERCEDE REQUIREMENTS UNDER THE OREGON FIRE CODE, NFPA STANDARDS OR DIRECTION FROM FIRE CHIEF.

LAST REVISION DATE: OCT 2013	JO # STANDARD
BELOW GRADE CHECK VALVE & BALL DRIP VALVE, IN OPEN BOTTOM DRAIN STRUCTURE (NTS)	
MT ANGEL, OR	DETAIL NO. 561

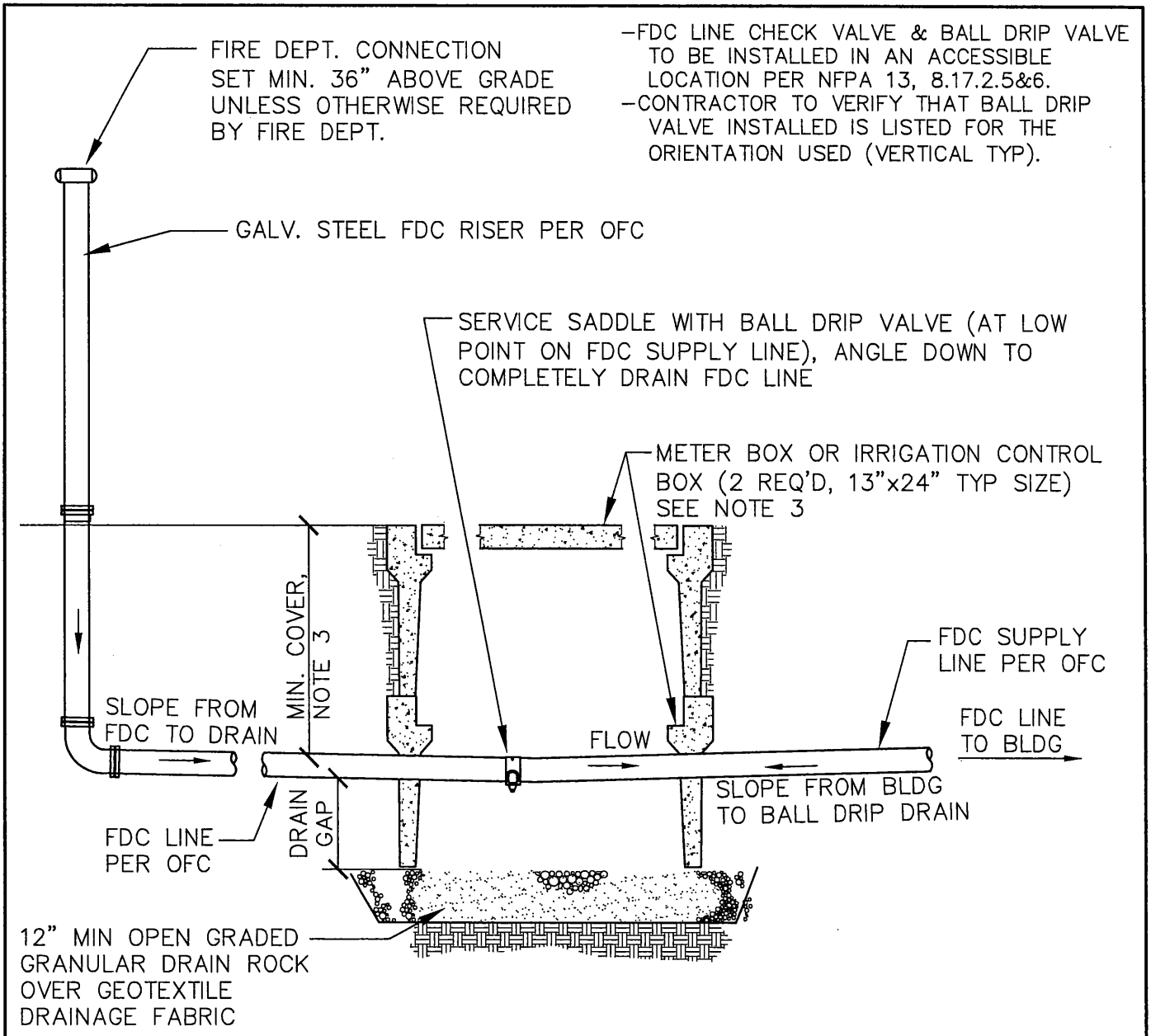

NOTES:

1. INSTALL BALL-DRIP DRAIN VALVE & BOX AT LOW POINT IN FDC LINE PROFILE (IE. BALL DRIP VALVE SHALL BE CONFIGURED TO DRAIN ENTIRE FDC PIPE BETWEEN FDC RISER & BUILDING WHEN FDC IS NOT IN USE).
2. CONFIGURATION SHOWN IS BASED ON FDC LINE CHECK VALVE INSIDE BUILDING (IE. FDC LINE "DRY" WHEN NOT IN USE).
3. UNLESS OTHERWISE REQUIRED TO ADDRESS UTILITY CONFLICTS OR OTHER ISSUES, COVER DEPTH FOR "DRY" FDC LINE SHALL BE 12" MIN AT ALL LOCATIONS.
4. BALL DRIP VALVE SHALL BE ACCESSIBLE IN BOX FOR INSPECTION & MAINTENANCE AS SHOWN (PROVIDE LARGER BOXES AS NECESSARY TO ACCOMPLISH THIS).
5. THIS DETAIL DOES NOT SUPERCEDE REQUIREMENTS UNDER THE OREGON FIRE CODE, NFPA STANDARDS OR DIRECTION FROM FIRE CHIEF.

LAST REVISION DATE: OCT 2013	JO # STANDARD
FDC LINE BALL DRIP DRAIN VALVE (CHECK VALVE IN BLDG) OPEN BOTTOM DRAIN STRUCT (NTS)	
MT ANGEL, OR	DETAIL NO. 562

WATERLINE PRESSURE TEST REPORT

Project Location:	Project Name:	Date:
Inspector: (Print)	**Waterline to be tested.** From Station:	To Station:
Verify that all in-line valves, including hydrant mainline valves, are open? Yes / No		
Verify that all corp stops are open? Yes / No		
Verify that pressure gauge is mounted at high point of line to be tested? Yes / No If no, correct for elevation difference *(ie. add 0.433 psi per foot elevation difference).*		
System Static Pressure (psi):	Starting Pressure (psi): (greater of 150 psi or 1.5 times static)	Ending Pressure (psi):
Test Length: (2 hours minimum)	Starting Time:	Ending Time:
Volume Required to Reach Initial Test Pressure (gal):	Allowable Leakage (gal): (2 times table value below)	Measured Leakage (gal):
TEST RESULTS: Pass / Fail		

ALLOWABLE LEAKAGE PER 1,000 FEET OF PIPELINE - *gph*

Test Pressure *psi*	**NOMINAL PIPE DIAMETER - *in.***									
	3	**4**	**6**	**8**	**10**	**12**	**14**	**16**	**18**	**20**
200	0.32	0.43	0.64	0.85	1.06	1.28	1.48	1.70	1.91	2.12
175	0.30	0.40	0.59	0.80	0.99	1.19	1.39	1.59	1.79	1.98
150	0.28	0.37	0.55	0.74	0.92	1.10	1.29	1.47	1.66	1.84

If the pipeline under test contains various diameters, the allowable leakage shall be the sum of the allowable leakage for each size. No additional leakage allowance will be given for fire hydrant assemblies or valves.

Allowable leakage based on : $L = SD(P)^{1/2}/133{,}200$

Where:

L = allowable leakage, in gallons per hour
S = length of pipe tested, in feet
D = nominal diameter of the pipe, in inches
P = test pressure during the leakage test, in psig

Regardless of leakage, maximum pressure drop during test period shall not exceed 5 psi/hour.

TEST PROCEDURE

1. Apply hydrostatic pressure by pumping water from an auxiliary supply basin. Accurately determine the amount of water required to reach the initial test pressure by refilling the supply basin with a calibrated container following pressurization of pipeline.
2. Monitor test pressure for 2 hour period.
3. At the completion of the test period, re-pressurize the pipeline by pumping water from the auxiliary supply basin. Accurately determine the amount of water required to reach the test pressure by refilling the supply basin with a calibrated container following pressurization of pipeline. If the measured leakage is less than the allowable leakage, the test is successful.

Copyright 1996
Westech Engineering, Inc

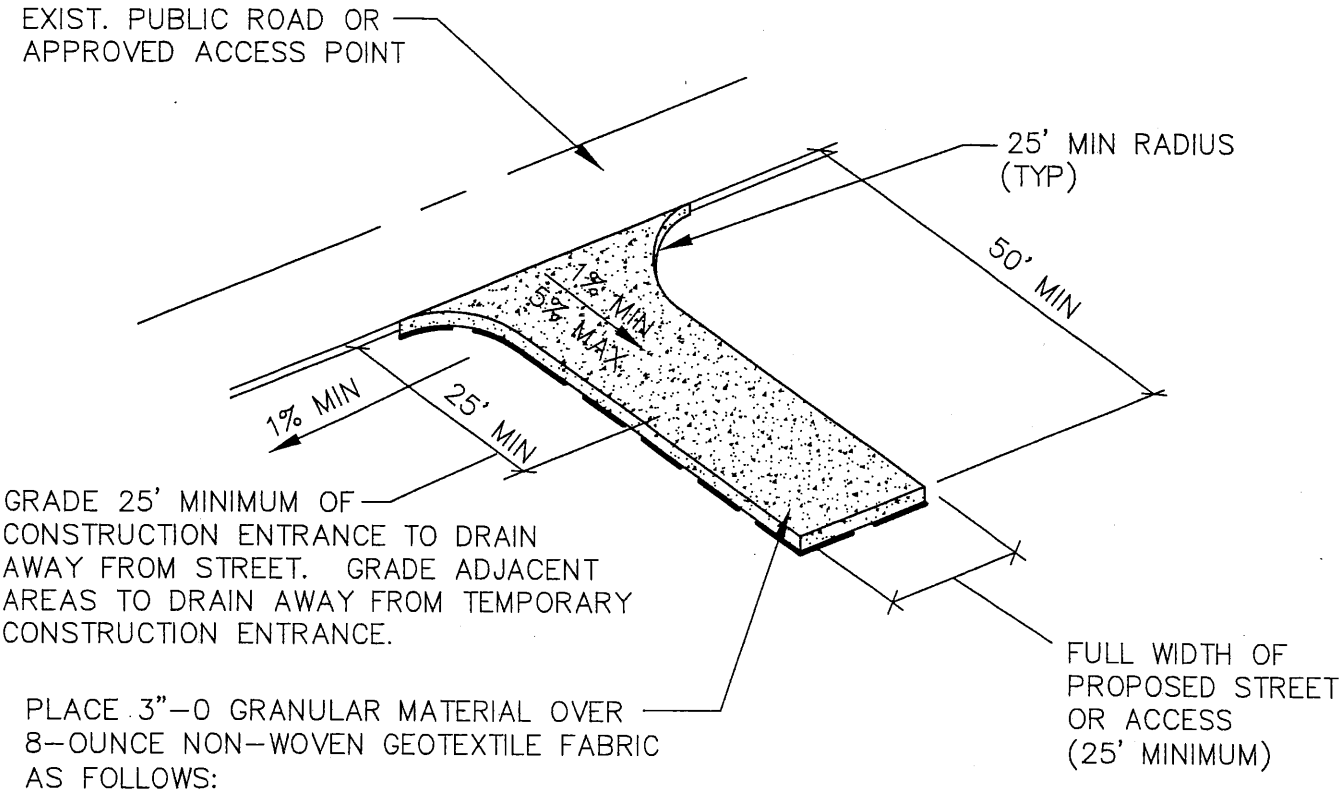

PLACE 3"–0 GRANULAR MATERIAL OVER 8–OUNCE NON–WOVEN GEOTEXTILE FABRIC AS FOLLOWS:

DRY WEATHER ACCESS

14–INCH MIN. DEPTH OVER COMPACTED SUBGRADE & FABRIC

WET WEATHER ACCESS

24–INCH MIN. DEPTH OVER UNDISTURBED SUBGRADE & FABRIC

CONSTRUCTION NOTES:

1. THE AREA OF THE CONSTRUCTION ENTRANCE SHALL BE STRIPPED OF ALL TOPSOIL, VEGETATION, ROOTS, AND OTHER NON–COMPACTABLE MATERIAL.
2. SUBGRADE SHALL BE COMPACTED AND PROOFROLLED PRIOR TO PLACEMENT OF GRANULAR MATERIAL. FAILURE TO PASS PROOFROLL WILL REQUIRE USE OF WET WEATHER SECTION.
3. FAILURE OR PUMPING OF THE DRY WEATHER SECTION WILL REQUIRE REMOVAL OF THE GRANULAR MATERIAL AND INSTALLATION OF THE WET WEATHER SECTION.

MAINTENANCE NOTES:

1. THE ENTRANCE SHALL BE MAINTAINED IN A CONDITION THAT WILL PREVENT TRACKING OR FLOW OF SEDIMENT ONTO PUBLIC RIGHT–OF–WAY. THIS MAY REQUIRE PERIODIC TOP DRESSING WITH 2–INCH STONE AS CONDITIONS DEMAND, AND REPAIR AND/OR CLEANOUT OF STRUCTURES USED TO TRAP SEDIMENT.
2. ALL MATERIALS SPILLED, DROPPED, WASHED OR TRACKED FROM VEHICLES ONTO ROADWAYS OR INTO STORM DRAINS MUST BE REMOVED IMMEDIATELY.
3. ALL TRUCKS TRANSPORTING SATURATED SOILS SHALL BE WELL SEALED. WATER DRIPPAGE FROM TRUCKS MUST BE REDUCED TO 1 GALLON PER HOUR PRIOR TO LEAVING THE SITE.

LAST REVISION DATE: SEPT 2013	
TEMPORARY CONSTRUCTION ENTRANCE (NTS)	
MT ANGEL, OR	DETAIL NO. 610

SILT FENCE NOTES:

1. BURY BOTTOM OF FILTER FABRIC 6" VERTICALLY BELOW FINISHED GRADE.
2. TRENCH TO BE DUG WITH DITCH-WITCH, BY HAND OR OTHER METHOD AS REQUIRED TO MINIMIZE WIDTH.
3. BACKFILL & COMPACT NATIVE SOIL IN TRENCH AFTER FENCE INSTALLATION.
4. STITCHED LOOPS TO BE INSTALLED TO THE UPHILL SIDE OF THE FENCE.

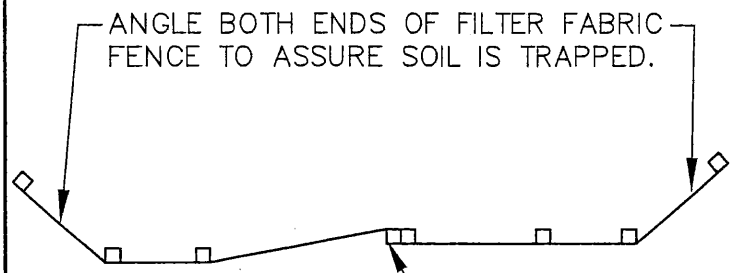

TOP VIEW

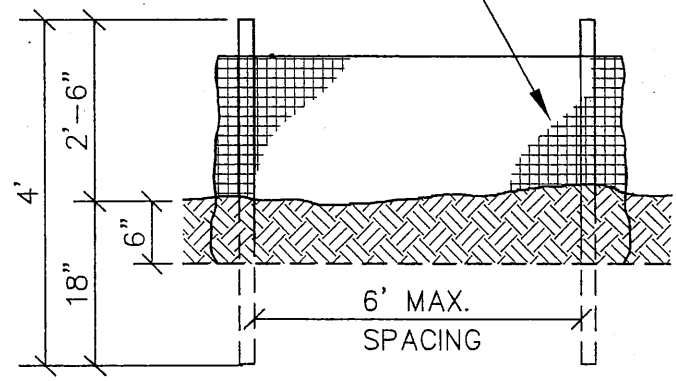

FRONT VIEW

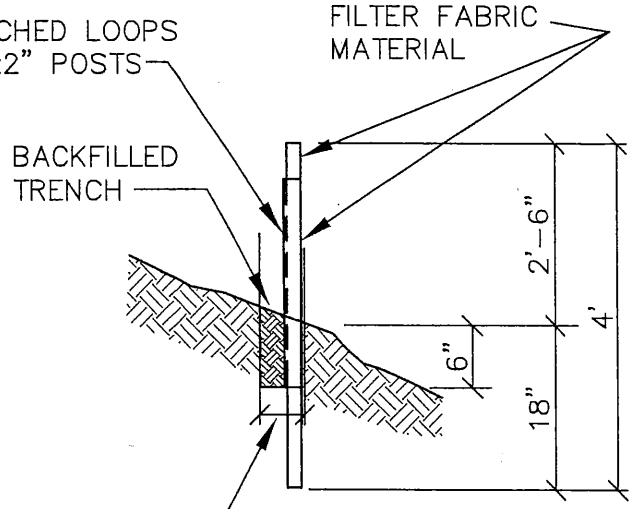

SIDE VIEW

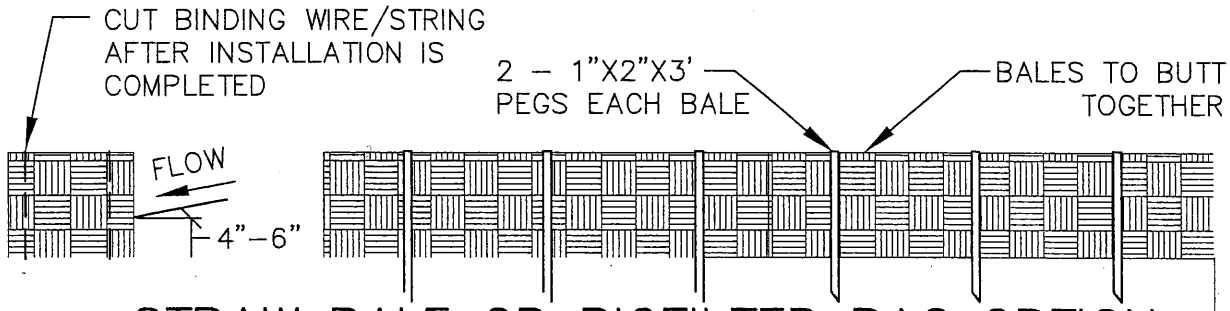

STRAW BALE OR BIOFILTER BAG OPTION

STRAW BALE NOTES:

1. EMBED BALES 4"-6" BELOW GROUND SURFACE.
2. DRIVE STAKES MIN. 12" INTO GROUND SURFACE, AND FLUSH W/ TOP OF BALES.

MAINTENANCE NOTES:

SEDIMENT BARRIERS SHALL BE MAINTAINED UNTIL UP-SLOPE AREA IS PERMANENTLY STABILIZED. AT NO TIME SHALL MORE THAN ONE FOOT OF SEDIMENT BE ALLOWED TO ACCUMULATE BEHIND SEDIMENT FENCES, STRAW BALES OR BIOFILTER BAGS. NEW SEDIMENT BARRIERS SHALL BE INSTALLED UPHILL AS REQUIRED TO CONTROL SEDIMENT TRANSPORT.

LAST REVISION DATE: SEPT 2013	
SEDIMENT BARRIERS (NTS)	
MT ANGEL, OR	DETAIL NO. 611

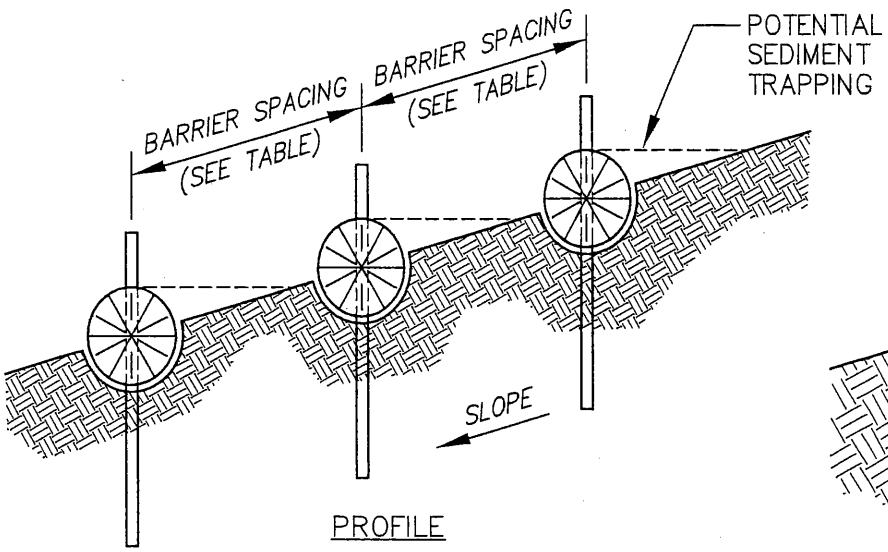

PROFILE

PLACE STRAW WATTLES PARALLEL TO SLOPE CONTOURS

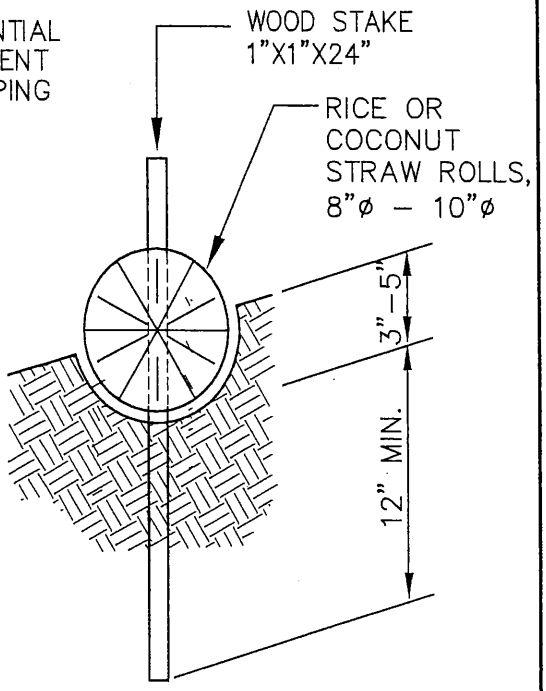

SECTION

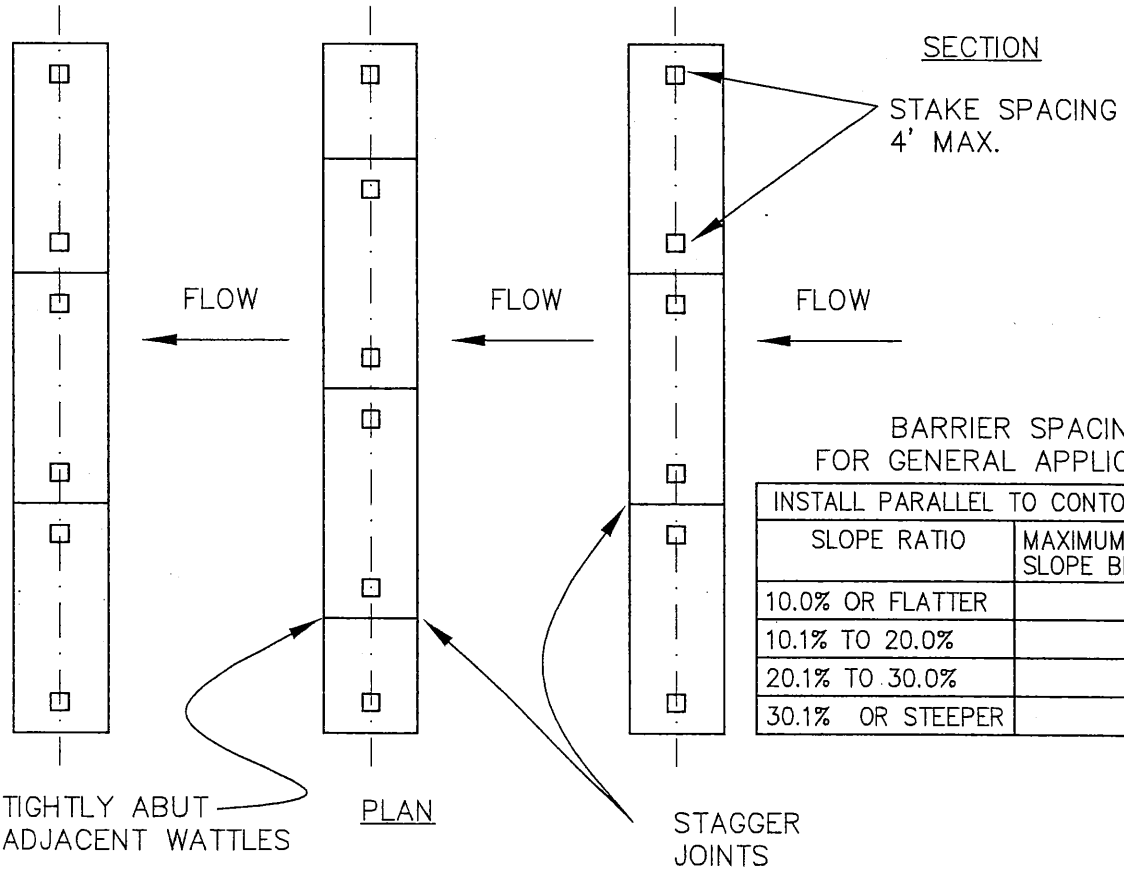

PLAN

BARRIER SPACING
FOR GENERAL APPLICATION

INSTALL PARALLEL TO CONTOURS AS FOLLOWS	
SLOPE RATIO	MAXIMUM SPACING ON SLOPE BETWEEN WATTLES
10.0% OR FLATTER	50' O.C.
10.1% TO 20.0%	25' O.C.
20.1% TO 30.0%	10' O.C.
30.1% OR STEEPER	5' O.C.

NOTES:
1. ALL MATERIAL SHALL CONFORM TO OSHD STANDARD SPECIFICATIONS, 1996 EDITION.
2. SEDIMENT BARRIERS SHALL BE MAINTAINED UNTIL UP–SLOPE AREA IS PERMANENTLY STABILIZED.
3. AT NO TIME SHALL SEDIMENT BE ALLOWED TO ACCUMULATE ABOVE THE TOP OF THE STRAW WATTLE.
4. NEW SEDIMENT BARRIERS SHALL BE INSTALLED UPHILL AS REQUIRED TO CONTROL SEDIMENT TRANSPORT.

LAST REVISION DATE: SEPT 2013	
STRAW WATTLE SEDIMENT BARRIER (NTS)	
MT ANGEL, OR	DETAIL NO. 612

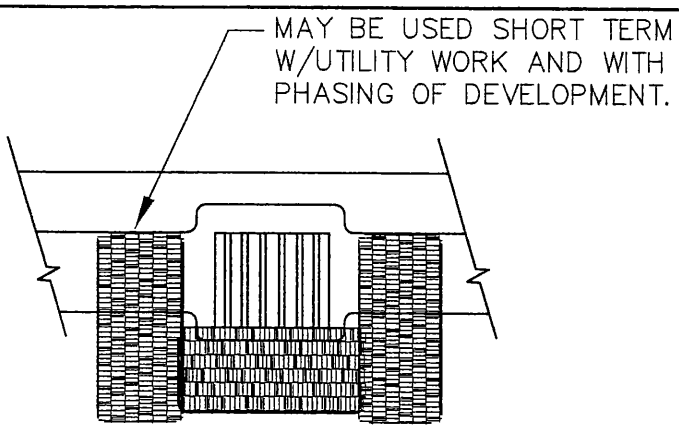

CURB INLET C.B.

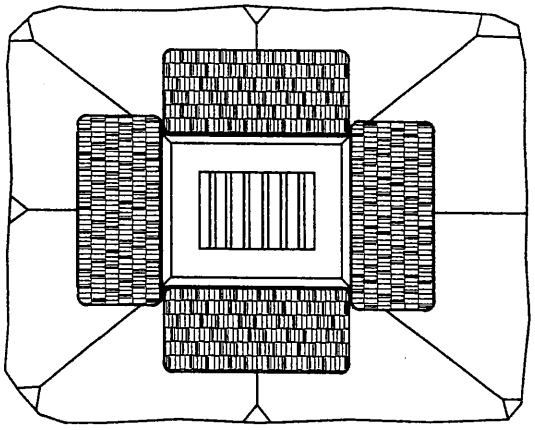

AREA DRAIN

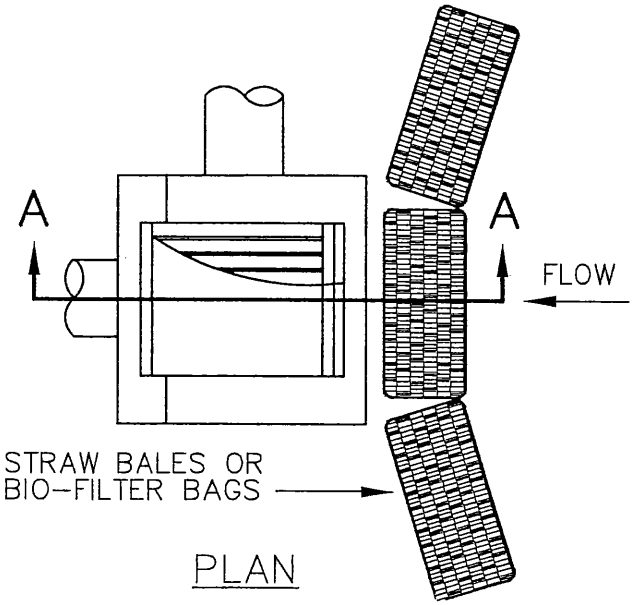

PLAN

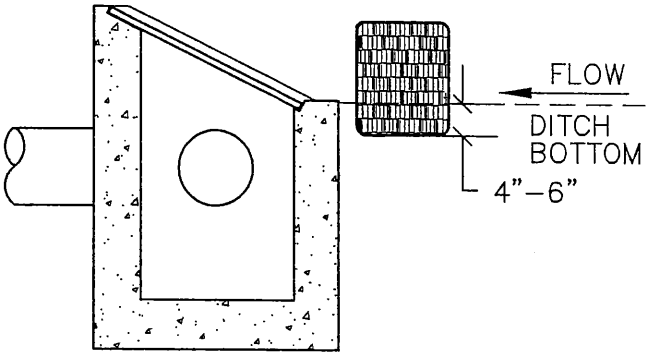

SECTION A-A

DITCH INLET C.B.

MAINTENANCE NOTES:

1. SEDIMENT BARRIERS SHALL BE MAINTAINED UNTIL UP-SLOPE AREA IS PERMANENTLY STABILIZED.
2. AT NO TIME SHALL MORE THAN ONE FOOT OF SEDIMENT BE ALLOWED TO ACCUMULATE BEHIND SEDIMENT FENCES, STRAW BALES OR BIOFILTER BAGS.
3. NEW SEDIMENT BARRIERS SHALL BE INSTALLED UPHILL AS REQUIRED TO CONTROL SEDIMENT TRANSPORT.

LAST REVISION DATE: SEPT 2013	
INLET SEDIMENT CONTROL (NTS)	
MT ANGEL, OR	DETAIL NO. 613

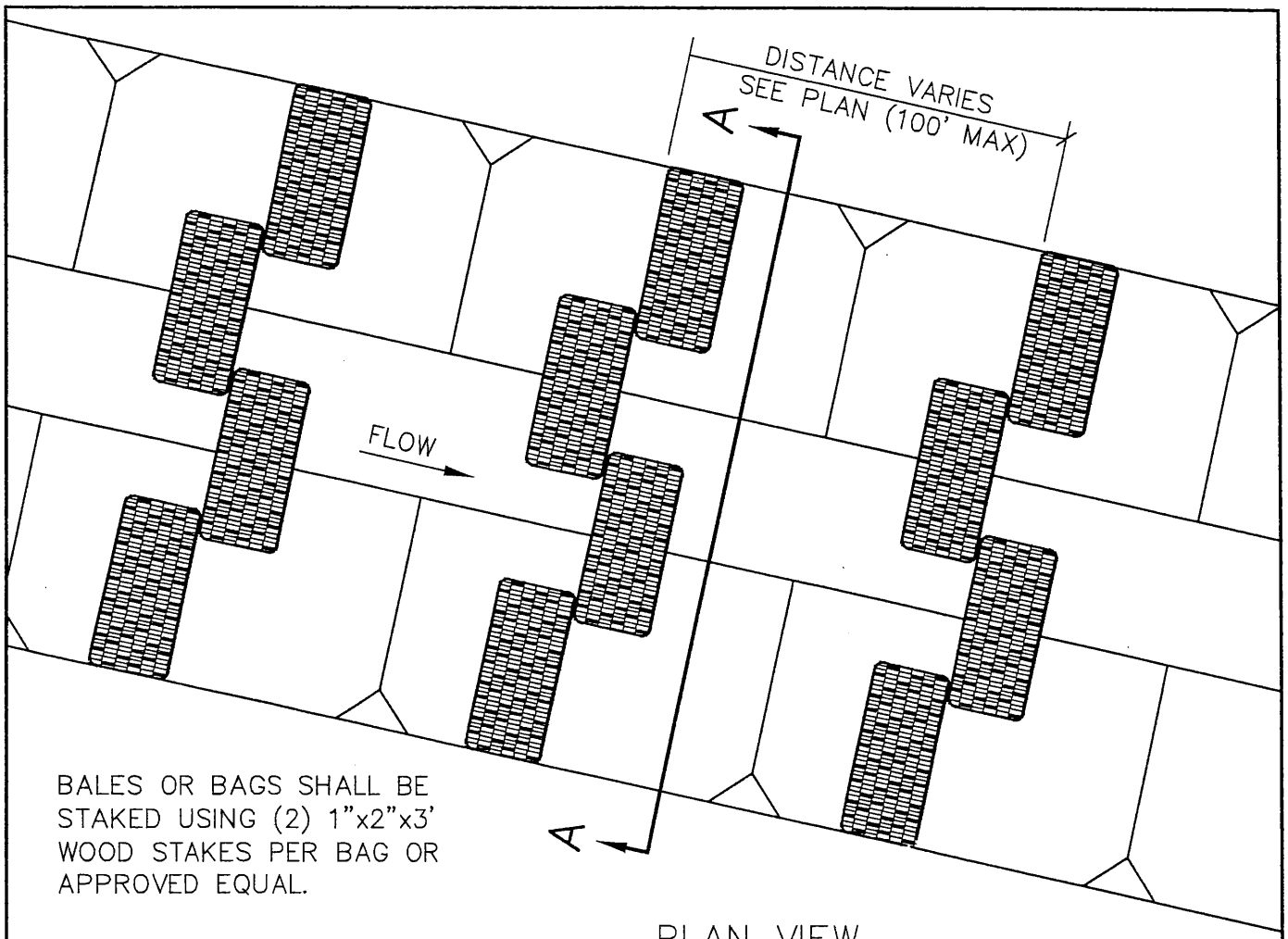

BALES OR BAGS SHALL BE STAKED USING (2) 1"x2"x3' WOOD STAKES PER BAG OR APPROVED EQUAL.

PLAN VIEW

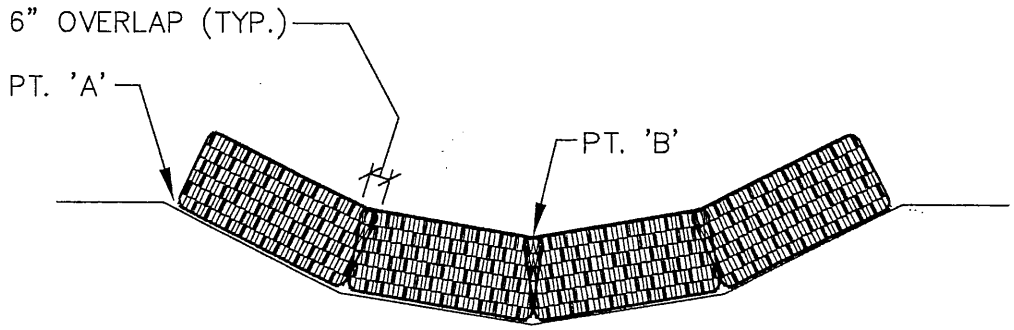

SECTION A–A

MAINTENANCE NOTES:

1. SEDIMENT BARRIERS SHALL BE MAINTAINED UNTIL UP–SLOPE AREA IS PERMANENTLY STABILIZED.
2. AT NO TIME SHALL MORE THAN ONE FOOT OF SEDIMENT BE ALLOWED TO ACCUMULATE BEHIND STRAW BALES OR BIOFILTER BAGS.
3. NEW SEDIMENT BARRIERS SHALL BE INSTALLED UPHILL AS REQUIRED TO CONTROL SEDIMENT TRANSPORT.
4. PT. 'A' SHALL BE 6" MIN. HIGHER THAN PT. 'B'.

LAST REVISION DATE: SEPT 2013	
DITCH AND SWALE PROTECTION (NTS)	
MT ANGEL, OR	DETAIL NO. 614

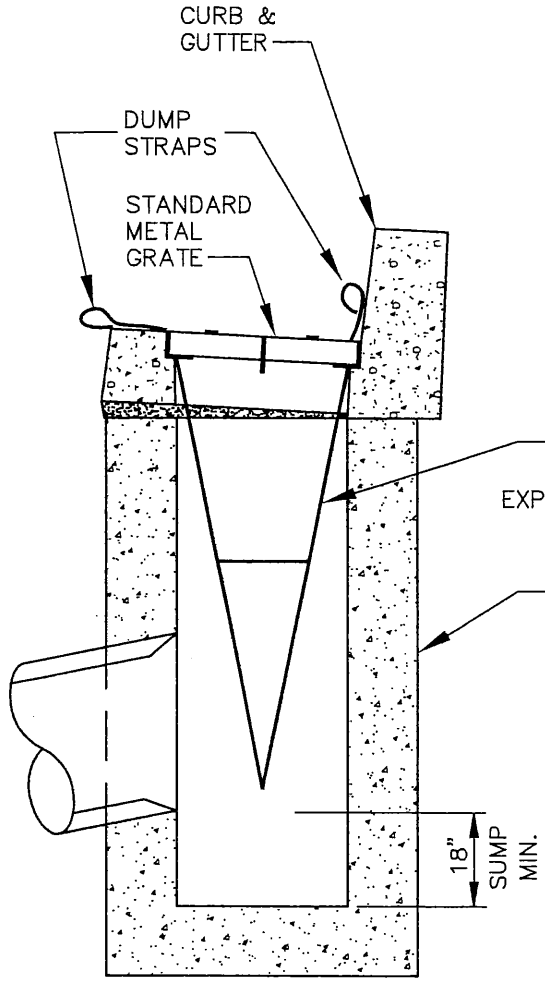

INSTALLATION DETAIL

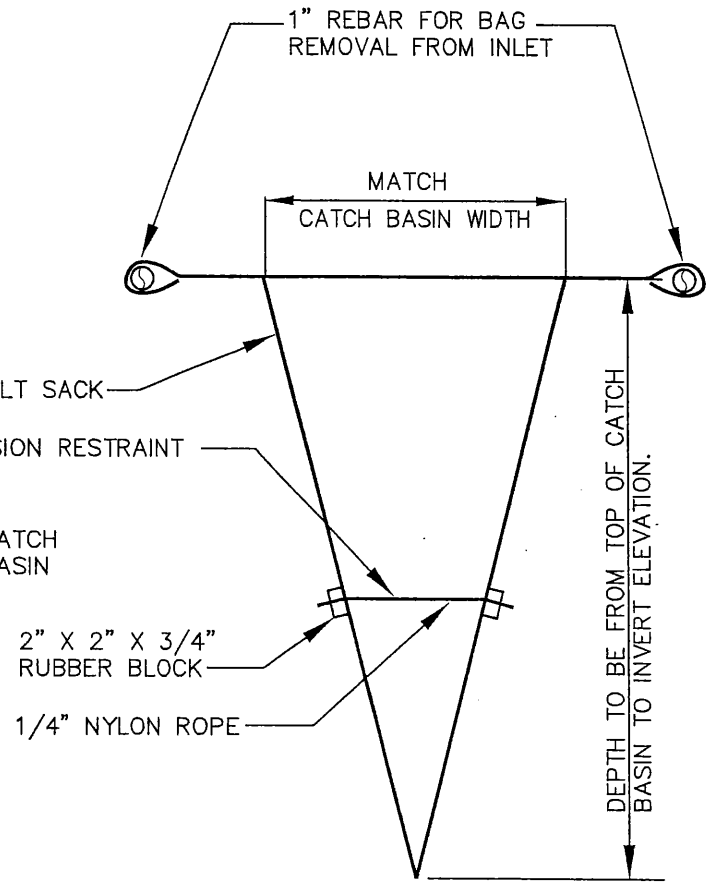

BAG DETAIL

NOTES:

1. EMPTY SILT SACK AS NECESSARY.
2. SILTSACK SEDIMENT CONTROL DEVICE AS MANUFACTURED BY ACF ENVIRONMENTAL AND SUPPLIED BY ACF WEST (503) 771-5115 OR APPROVED EQUAL.

LAST REVISION DATE: SEPT 2013	
SILT SACK INLET DETAIL (NTS)	
MT ANGEL, OR	DETAIL NO. 615